E11573

Jumper cable with valve plug

VVDAA031MSS01,5H03STGH030MSS

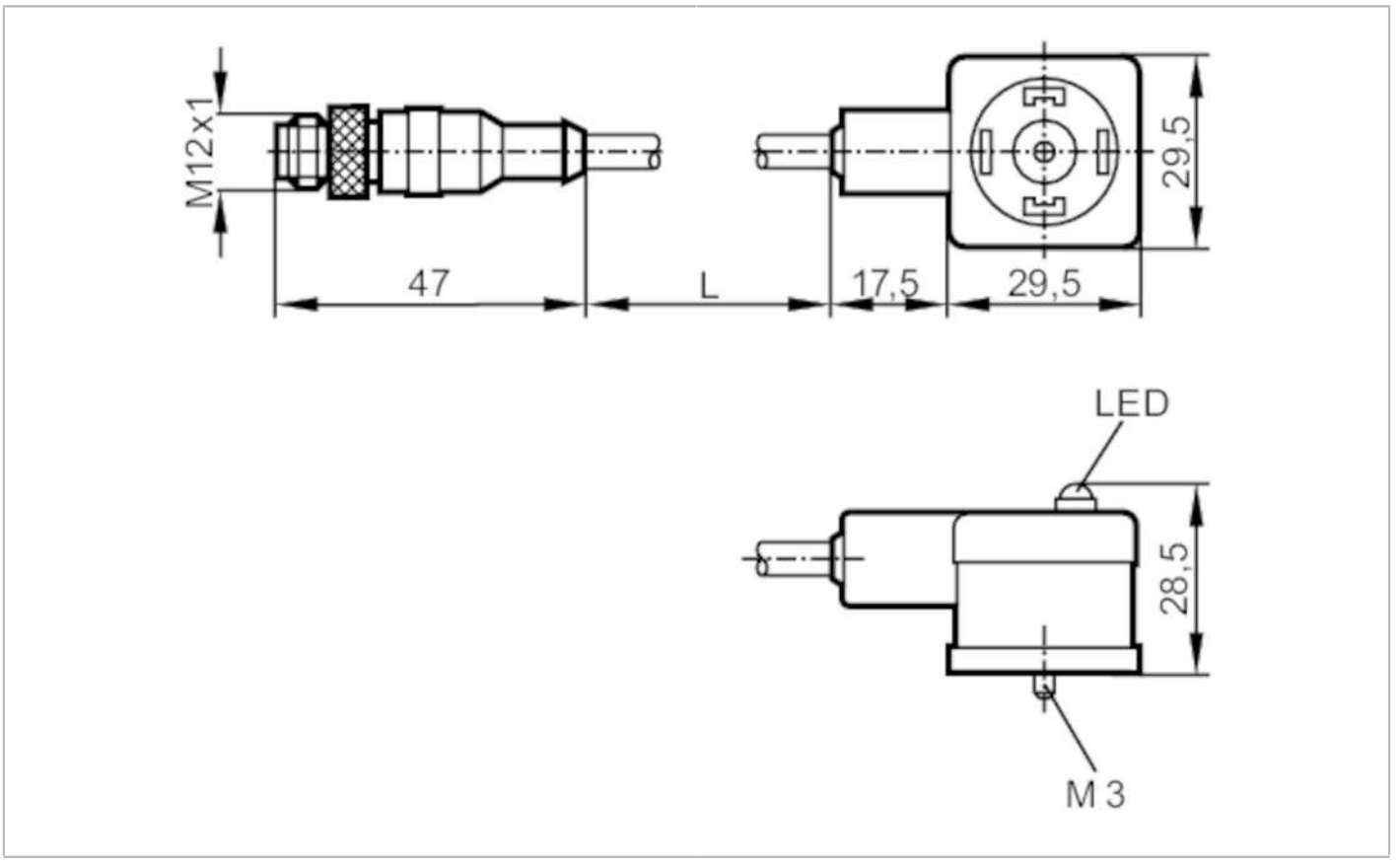

Application			
Special feature			Free from silicone; Halogen-free; Gold-plated contacts
Free from silicone			yes
Electrical data			
Operating voltage	[V]		< 24 AC/DC
Overvoltage protection			yes; (VDR)
Max. current load total	[A]		3
Operating conditions			
Ambient temperature	[°C]		-25...80
Protection			IP 67
Mechanical data			
Weight	[g]		115.5
Materials			PUR
Moulded-body material			PUR
Material nut			brass, nickel-plated
Displays / operating elements			
Display		switching status	1 x LED, yellow
Accessories			
Items supplied			screw
			panel for labelling

E11573

Jumper cable with valve plug

VVDAA031MSS01,5H03STGH030MSS

Remarks

Pack quantity	1 pcs.

Electrical connection - plug

Connector: 1 x M12, straight; coding: A; Moulded body: PUR; Locking: brass, nickel-plated; Contacts: gold-plated; Tightening torque: 0.7...0.9 Nm

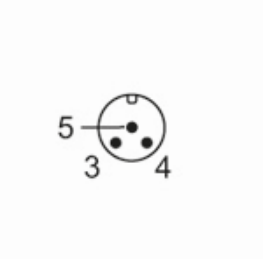

Electrical connection

Cable: 1.5 m, PUR, Halogen-free, black, Ø 5 mm; 3 x 0.5 mm² (42 x Ø 0.1 mm)

Connection

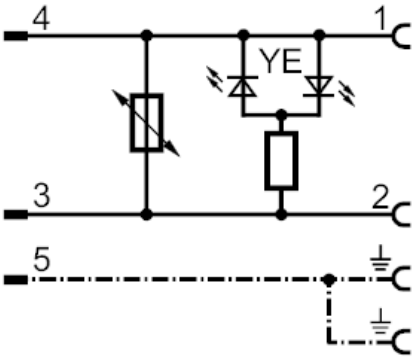

Electrical connection - socket

Connector: 1 x valve type A DIN, angled; Moulded body: PUR; Locking: brass, nickel-plated; Contacts: nickel-plated brass; Tightening torque: 0.7...0.9 Nm

