JUMO GmbH & Co. KG
Delivery address: Mackenrodtstraße 14
36039 Fulda, Germany
Postal address: 36035 Fulda, Germany
Phone: +49 661 6003-0
Fax: +49 661 6003-607
E-mail: mail@jumo.net
Internet: www.jumo.net

JUMO Instrument Co. Ltd.
JUMO House
Temple Bank, Riverway
Harlow, Essex CM20 2DY, UK
Phone: +44 1279 635533
Fax: +44 1279 635262
E-mail: sales@jumo.co.uk
Internet: www.jumo.co.uk

JUMO Process Control, Inc.
6733 Myers Road
East Syracuse, NY 13057, USA
Phone: 315-437-5866
1-800-554-5866
Fax: 315-437-5860
E-mail: info.us@jumo.net
Internet: www.jumousa.com

Panel-mounted Thermostats

ETH Series

Special features

- Version according to DIN EN 14597
- Pressure Equipment Directive 97/23/EC



Type ETH-20



Type ETH-70

Brief description

Panel-mounted thermostats ETH monitor thermal processes. The devices are available as safety-temperature monitors STW (STB) and safety temperature limiters STB. In the event of a malfunction, the STB switches the monitored machine to a safe operating status.

Panel-mounted thermostats operate according to the fluid expansion principle; a microswitch is used as an electrical switching element.

Approvals/approval marks (see "Technical Data")

2013-03-04/00073220

JUMO GmbH & Co. KG
Delivery address: Mackenrodtstraße 14
36039 Fulda, Germany
Postal address: 36035 Fulda, Germany
Phone: +49 661 6003-0
Fax: +49 661 6003-607
E-mail: mail@jumo.net
Internet: www.jumo.net

JUMO Instrument Co. Ltd.
JUMO House
Temple Bank, Riverway
Harlow, Essex CM20 2DY, UK
Phone: +44 1279 635533
Fax: +44 1279 635262
E-mail: sales@jumo.co.uk
Internet: www.jumo.co.uk

JUMO Process Control, Inc.
6733 Myers Road
East Syracuse, NY 13057, USA
Phone: 315-437-5866
1-800-554-5866
Fax: 315-437-5860
E-mail: info.us@jumo.net
Internet: www.jumousa.com

Technical data

Switching function

Safety temperature monitor STW	If the temperature on the temperature probe exceeds the set limit value, the electrical circuit is opened by a snap-action switch. If the temperature falls below the selected limit value (by the amount of the switching differential), the switch is reset to its initial position.
Restart lock of the safety temperature limiter STB	If the temperature on the temperature probe exceeds the set limit value, the electrical circuit is opened and the microswitch is mechanically locked. The microswitch can be manually unlocked once the dangerous temperature drops by approx. 10 % of the scale range (approx. 15 % with a limit value setting > + 350 °C).
Use of the safety temperature monitor STW as a safety temperature limiter STB	The switching circuit following the thermostat must comply with DIN EN 14597 and VDE 0116.
Self-monitoring for the safety temperature limiter STB and safety temperature limiter STW (STB)	If the measuring system is destroyed (i.e. if the expansion fluid escapes) the pressure in the membrane of the STB and STW (STB) drops and permanently opens the electrical circuit. Unlocking is no longer possible. If the probe has cooled down to a temperature below approx. -20 °C, the electrical circuit is also opened; when the temperature rises above approx. -20 °C, the STB must be unlocked manually using the restart knob. The STW (STB) automatically restarts.

Control ranges and temperature probes

Liquid-filled					
Type	**Control ranges / limit value ranges**	**Max. allowable probe temperature**	**Maximum capillary length in mm**	**Probe length, dimension "L" in mm**	
				Probe–Ø "d" in mm, Ø "6" = in standard	
	in °C	**in °C**		**6**	**8**
ETH-20	+30 to +110	135		108	75
ETH-70	+60 to +130	150		116	79
	+20 to +150	175	5000	77	60
	+50 to +250	290		64	49
	+50 to +300	345		55	- -
Gas-filled					
ETH-20	+20 to +400	460	1000	176	106
ETH-70	+20 to +500	575	2000	127	81
	+20 to +500	575	4000	202	119

Capillary and temperature probe

Type	**Scale limit value**	**Capillary**	**Temperature probe**	**Comments**
ETH- ..	Up to 200 °C	Copper (Cu) ø 1.5mm Material no. 2.0090	Copper (Cu) Material no. 2.0090 Hard soldered	- -
	Up to 350 °C	Copper (Cu) ø 1.5mm Material no. 2.0090	Stainless steel (CrNi) ø 1.5mm Material No. 1.4571	- -
	Up to 500 °C	Stainless steel (CrNi) ø 1.5mm	Stainless steel (CrNi) ø 1.5mm Material no. 1.4571	- -
	Up to 350°C	Stainless steel (CrNi) ø 1.5mm	Stainless steel (CrNi) ø 1.5mm Material no. 1.4571	Available at extra cost
Capillary length	Standard 1,000 mm, maximum 5,000 mm			
Minimum bending radius of the capillary	5 mm			

JUMO GmbH & Co. KG
Delivery address: Mackenrodtstraße 14
36039 Fulda, Germany
Postal address: 36035 Fulda, Germany
Phone: +49 661 6003-0
Fax: +49 661 6003-607
E-mail: mail@jumo.net
Internet: www.jumo.net

JUMO Instrument Co. Ltd.
JUMO House
Temple Bank, Riverway
Harlow, Essex CM20 2DY, UK
Phone: +44 1279 635533
Fax: +44 1279 635262
E-mail: sales@jumo.co.uk
Internet: www.jumo.co.uk

JUMO Process Control, Inc.
6733 Myers Road
East Syracuse, NY 13057, USA
Phone: 315-437-5866
1-800-554-5866
Fax: 315-437-5860
E-mail: info.us@jumo.net
Internet: www.jumousa.com

Technical data

Electrical data

Switching element	ETH-20	ETH-70	ETH-70/U
	Microswitch with changeover contact	Microswitch with N/C contact and restart lock	Microswitch with N/C contact, restart lock, and additional signal contact
Maximum switching capacity	AC 230 V +10 %, 10 (2) A, cos φ = 1 (0.6), DC 230 V +10 %, 0.25 A		
	With switching differential 2% AC 230 V +10 %, 6 (1.2) A, cos φ = 1 (0.6),	- -	- -
	Microswitch, gold-plated, extra code /au AC / DC 24 V, 0.1 A Contact resistance 2.5 to 10 mΩ		- -

Contact reliability	To ensure a high switching reliability, we recommend a minimum load of:	
	With silver contacts: AC / DC = 24 V, 100 mAt	With gold-plated contacts (abbreviation "au": AC / DC = 10 V, 5 mA

Approvals/approval marks

Type	**Switching function**	**DIN register no.**	**Tests**		**Important note !**
ETH-20	STW (STB)	STW (STB) 79908S	DIN Geprüft	Pressure Equipment Directive 97/23/EC CE0036	The DIN registry no. will become null and void if thermowells are used that are not specified in our data sheet 606710.
ETH-70	STB	STB 80008			

Operating data

Switching differential in % from the control range / limit value range	Switching function	With liquid-filled measuring system		
		Nominal value	Possible actual value	
	STW (STB)	5	4 max. 6	Standard
		9	8 max. 11	Upon request
		2	1 max. 3	Extra cost
		With liquid-filled measuring system		
		7	5 max. 12	Standard
		9	8 max. 16	Upon request
		2	1.5 max. 3	Extra cost
Switching point accuracy in % of the limit value range	In the upper third of the scale +0/-5 %, at scale beginning +0/-10 %			

Ambient temperature influence referring to the control range / limit value range	When the ambient temperature on the switching head deviates from the calibration ambient temperature of +22 °C, a switching point offset occurs. Higher ambient temperatures = lower switching point Lower ambient temperature = higher switching point		
	Panel-mounted thermostats with scale limit value		
	< 200 °C	÷ 200 °C ≤ 350 °C	> 350 °C ≤ 500 °C
		Influence on the switching head	
	0.17 %/K	0.13 %/K	0.12 %/K
	Influence on the capillary per meter		
	0.054 %/K	0.11 %/K	0.03 %/K
Allowable storage temperature	-50 to +50 °C		
Allowable ambient temperature when in use:	Max. +80 °C		
Rated position (NL)	Any		

JUMO GmbH & Co. KG
Delivery address: Mackenrodtstraße 14
36039 Fulda, Germany
Postal address: 36035 Fulda, Germany
Phone: +49 661 6003-0
Fax: +49 661 6003-607
E-mail: mail@jumo.net
Internet: www.jumo.net

JUMO Instrument Co. Ltd.
JUMO House
Temple Bank, Riverway
Harlow, Essex CM20 2DY, UK
Phone: +44 1279 635533
Fax: +44 1279 635262
E-mail: sales@jumo.co.uk
Internet: www.jumo.co.uk

JUMO Process Control, Inc.
6733 Myers Road
East Syracuse, NY 13057, USA
Phone: 315-437-5866
1-800-554-5866
Fax: 315-437-5860
E-mail: info.us@jumo.net
Internet: www.jumousa.com

Technical data

Switching head

Chassis material	Sheet steel, galvanized
Mounting	2 M3 screws, spacing 22 mm
Scale range	250 ° ∢
Electrical connection	Screw connection up to 2.5 mm^2 conductor cross section
Limit value setting	Prior to installation, the limit value can be set on the adjusting spindle with a screwdriver
Protection type	EN 60 529-IP 00
Weight	Approx. 0.2 kg

Process connection

ETH series with capillary	**Plain cylindrical probe "10"** (standard)
	Screw-in thermowell "20" (upon request)
	Screw-in sleeve with screw-in spigot G 1/2 form A according to DIN 3852/2 and clamping piece with fixing screw to lock the probe
Material	Up to +150 °C CuZn (nickel-plated) as standard, over +150 °C CrNi
Insertion length	Standard lengths: 100, 120, 150, 200, or 300 mm (different lengths upon request)
Immersion tube Ø	D = 8 mm
	For different process connections and thermowells refer to data sheet 606710

Note:

Physical and toxic features of the expansion mediums that could emerge in the event of a measuring system break.

Control range with scale limit value	Hazardous reactions	Fire and explosion hazard		Hazardous to water	Specifications about toxicology		
		Ignition temperature	Explosion limit		Irritant	Dangerous to health	Toxic
< +200 °C	No	+ 355 °C	0.6 - 8 V%	Yes	Yes	[a]	No
≥ 200 °C ≤ +350 °C		+ 490 °C	- -	Yes	Yes	[a]	
> 350 °C ≤ +500 °C		No	No	No	No	No	

[a] There is currently no statement by the health authority concerning hazards to health in the event of short-term exposure and low concentration, e.g. measuring system break.

JUMO GmbH & Co. KG
Delivery address: Mackenrodtstraße 14
36039 Fulda, Germany
Postal address: 36035 Fulda, Germany
Phone: +49 661 6003-0
Fax: +49 661 6003-607
E-mail: mail@jumo.net
Internet: www.jumo.net

JUMO Instrument Co. Ltd.
JUMO House
Temple Bank, Riverway
Harlow, Essex CM20 2DY, UK
Phone: +44 1279 635533
Fax: +44 1279 635262
E-mail: sales@jumo.co.uk
Internet: www.jumo.co.uk

JUMO Process Control, Inc.
6733 Myers Road
East Syracuse, NY 13057, USA
Phone: 315-437-5866
1-800-554-5866
Fax: 315-437-5860
E-mail: info.us@jumo.net
Internet: www.jumousa.com

Dimensions

ETH-70
With plain cylindrical probe "10" without thermowell

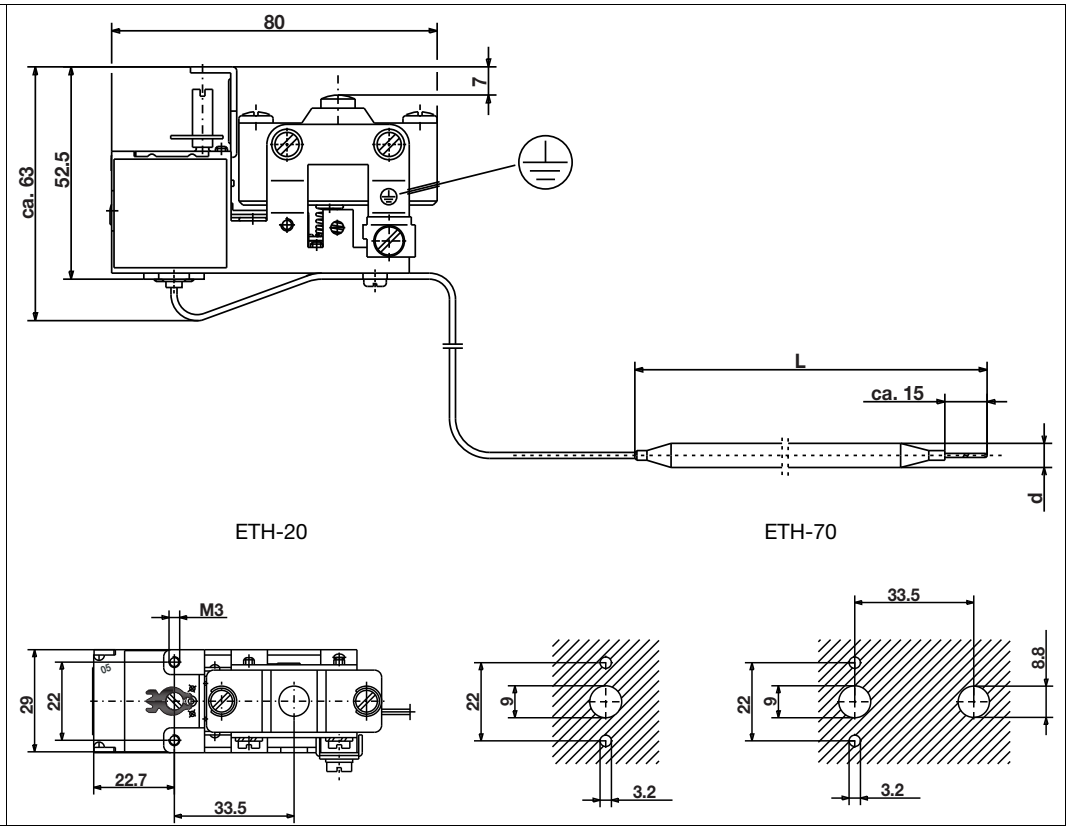

Wiring diagrams	**ETH-20** With changeover contact	**ETH-70** With N/C contact and restart lock	**ETH-70** With N/C contact, restart lock, and additional signal contact
	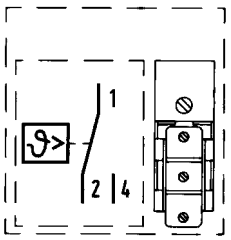	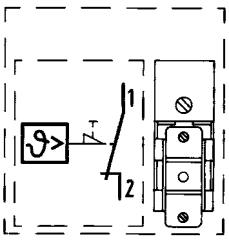	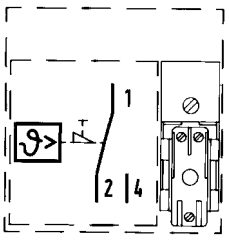

JUMO GmbH & Co. KG
Delivery address: Mackenrodtstraße 14
36039 Fulda, Germany
Postal address: 36035 Fulda, Germany
Phone: +49 661 6003-0
Fax: +49 661 6003-607
E-mail: mail@jumo.net
Internet: www.jumo.net

JUMO Instrument Co. Ltd.
JUMO House
Temple Bank, Riverway
Harlow, Essex CM20 2DY, UK
Phone: +44 1279 635533
Fax: +44 1279 635262
E-mail: sales@jumo.co.uk
Internet: www.jumo.co.uk

JUMO Process Control, Inc.
6733 Myers Road
East Syracuse, NY 13057, USA
Phone: 315-437-5866
1-800-554-5866
Fax: 315-437-5860
E-mail: info.us@jumo.net
Internet: www.jumousa.com

Order details

Panel-mounted thermostats, ETH series

Order code		(1) Basic type	
602010		Panel-mounted thermostat, ETH series	
	(2)	**Basic type extensions**	
20		ETH-20 safety temperature monitor STW	With capillary
70		ETH-70 safety temperature limiter STB	With capillary
	(3)	**Control range / limit value range °C**	
052		+30 to +110	
066		+60 to +130	
043		+20 to +150	
063		+50 to +250	
064		+50 to +300	
045		+20 to +400	
046		+20 to +500	
	(4)	**Switching differential**	
00		Without switching differential (ETHf-70 STB)	
20		2 % of the scale range	
50		5 % of the scale range	
70		7 % of the scale range	
90		9 % of the scale range	
	(5)	**Capillary length**	
1000		1000 mm	
2000		2000 mm	
3000		3000 mm	
4000		4000 mm	
5000		5000 mm	
....		(Special length, specifications in plain text)	
	(6)	**Capillary material**	
40		Cu (copper)	
20		CrNi (stainless steel)	
	(7)	**Process connection**	
10		Plain cylindrical probe	
20		Screw-in thermowell	
	(8)	**Thread of process connection**	
00		Without thread (process connection 10)	
13		External thread G 1/2	
	(9)	**Material of process connection**	
00		Only with process connection 10	
46		CuZn (brass)	
20		CrNi (stainless steel 1.4571)	

For different connection types and thermowells refer to data sheet 606710.

JUMO GmbH & Co. KG
Delivery address: Mackenrodtstraße 14
36039 Fulda, Germany
Postal address: 36035 Fulda, Germany
Phone: +49 661 6003-0
Fax: +49 661 6003-607
E-mail: mail@jumo.net
Internet: www.jumo.net

JUMO Instrument Co. Ltd.
JUMO House
Temple Bank, Riverway
Harlow, Essex CM20 2DY, UK
Phone: +44 1279 635533
Fax: +44 1279 635262
E-mail: sales@jumo.co.uk
Internet: www.jumo.co.uk

JUMO Process Control, Inc.
6733 Myers Road
East Syracuse, NY 13057, USA
Phone: 315-437-5866
1-800-554-5866
Fax: 315-437-5860
E-mail: info.us@jumo.net
Internet: www.jumousa.com

Panel-mounted thermostats, ETH series

Order code	(10)	Insertion length "S" (immersion tube length)
000		Without thermowell
100		100 mm
120		120 mm
150		150 mm
200		200mm
300		300 mm
...		.... Special length, specifications in plain text

	(11)	Diameter "D" (immersion tube diameter)
00		Without thermowell
8		8 mm
10		10 mm

	(12)	Diameter "d" (probe diameter)
6		6 mm
8		8 mm

	(13)	Extra codes[a]
000		Without extra code
574		"**U**" Microswitch with N/C contact, restart lock, and additional signal contact (only for STB)
702		**"au"** Snap-action switch, gold-plated

[a] List extra codes in sequence, separated by commas.

Order code:

(1)	(2)	(3)	(4)	(5)	(6)	(7)	(8)	(9)	(10)	(11)	(12)	(13)	
602010	/ ..	- ...	- ..	-	- ..	- ..	- ..	- ..	- ...	- ..	- .	/ ...	, ...

Order example:

602010 / 70 - 052 - 00 - 1000 - 40 - 10 - 00 - 00 - 100 - 00 - 8 / 702[a] , ...

[a] List extra codes in sequence, separated by commas.