MODEL: BU-P2854-*

Banana Jack (Panel mount)

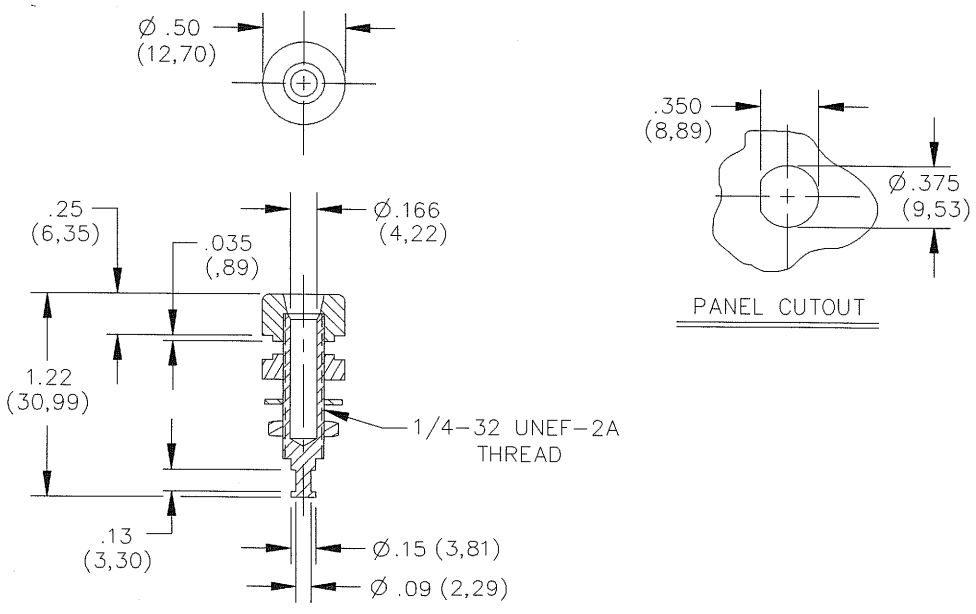

MATERIALS:
Contacts – Gold Plated Brass
Insulators – High Temperature Nylon
Comes standard is -0 Black; and -2 Red. Other colors available on special order
Solder connection

RATING:
15 Amps
Hands free testing to 2000 VDC max.
Temperature: -50°C to 120°C