

67 Concealed Pull

Surface mount

- **Flush mounting**
- **Enclosed housing**

Material and Finish

10 series: Plastic, black
20 & 40 series:
Handle: Aluminum, Silver or black powder coated
Housing and bushing: Plastic, black
Screws: Stainless steel, passivated

Performance Details

Max. static load:
10 series: 620 N (140 lbf)
20 series: 440 N (100 lbf)
40 series: 580 N (130 lbf)

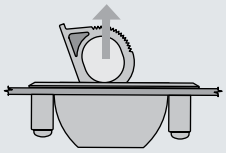

Flammability rating:
Housing & bushing: UL94-HB
Handle (10 Series only): UL94-V2

Operating temperature range:
10 Series:
-20°C (0°F) to 65°C (150°F)
20 and 40 Series:
-20°C (0°F) to 80°C (180°F)

Installation Notes

Thread forming screw
(M 4.2 x 1.4 x 16) supplied for door thickness 6.4 (.25) Max.
For thicker doors calculate screw length using the following formula:
Door thickness + 10 (.40)

Notes

Max. tightening torque of mounting screws: 0.5 N•m (5 in•lbf)

10 Series

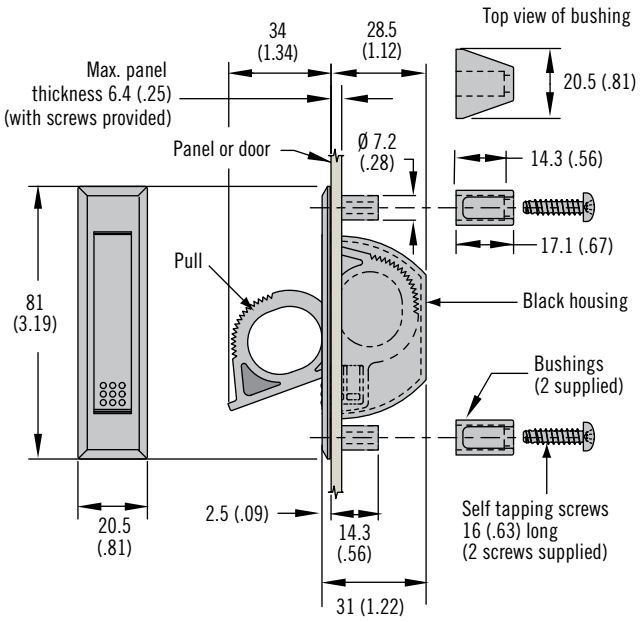

20 Series

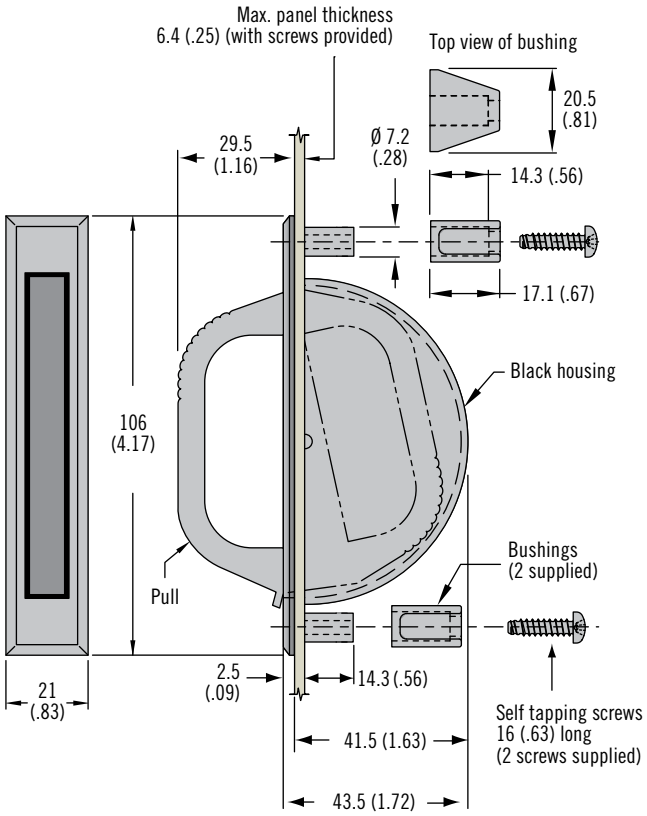

Dimensions in millimeters (inch) unless otherwise stated

40 Series



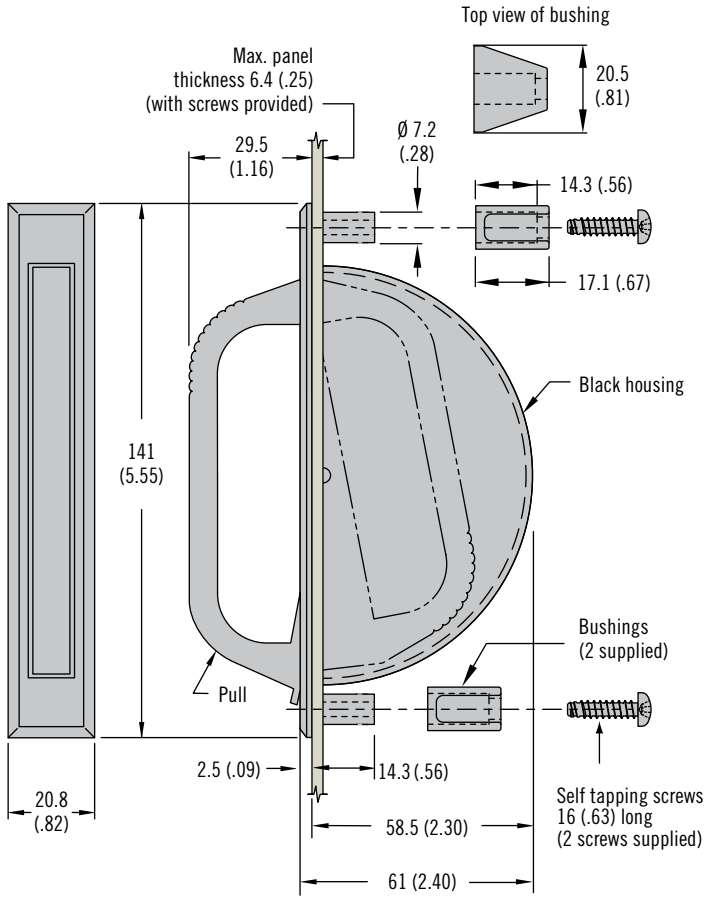

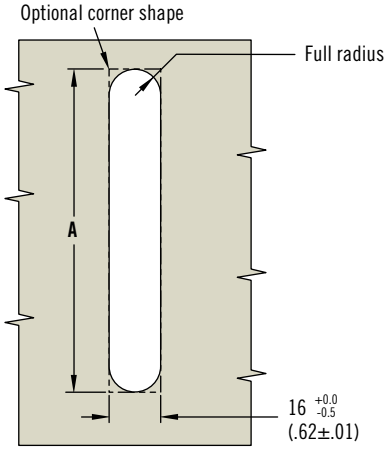

Series	Part Number		Installation
	Silver Handle	Black Handle	A
10	~	67-10	76 +1.0 -.00 (3.00 +.04 -.00)
20	67-27	67-25	102 +1.0 -.00 (4.00 +.04 -.00)
40	67-47	67-45	136 +1.0 -.00 (5.35 +.04 -.00)

Part Number

See table

Dimensions in millimeters (inch) unless otherwise stated