364 36

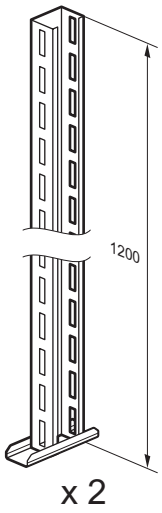

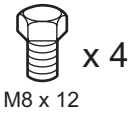

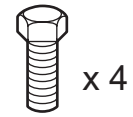



364 37

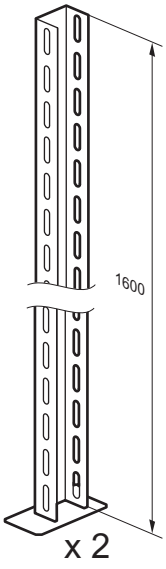

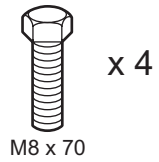







364 39

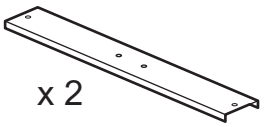

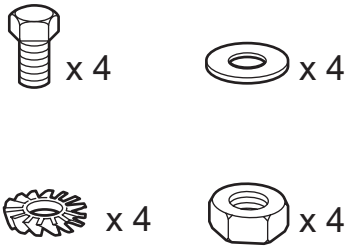

Atlantic / Atlantic inox

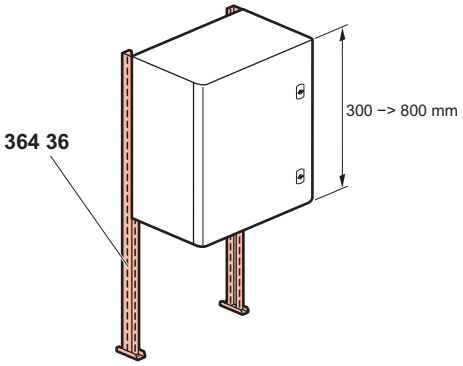

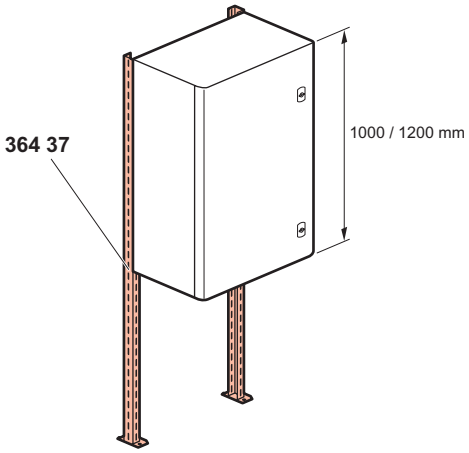

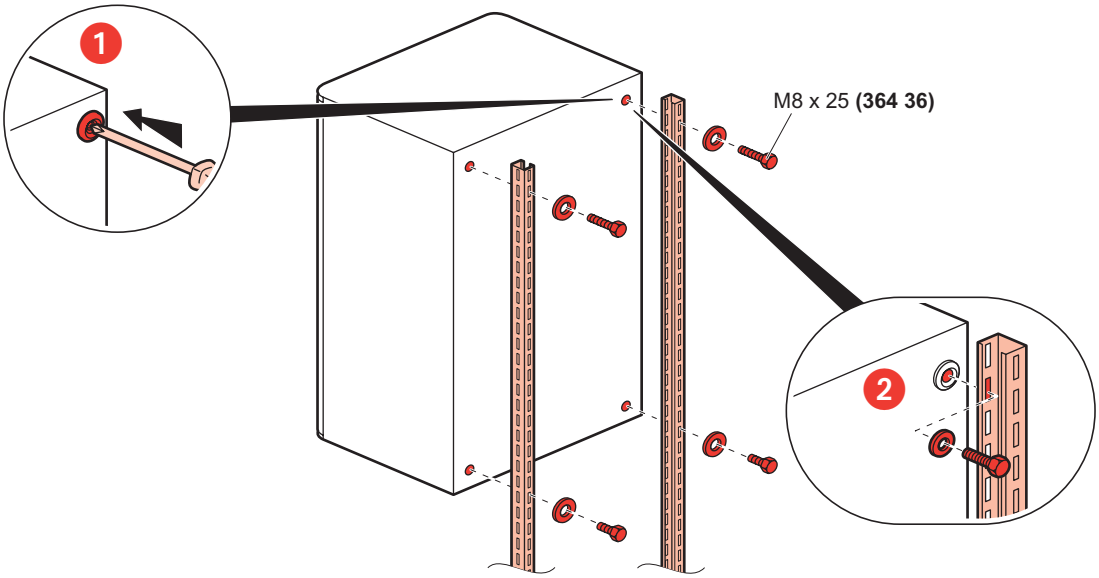

Marina

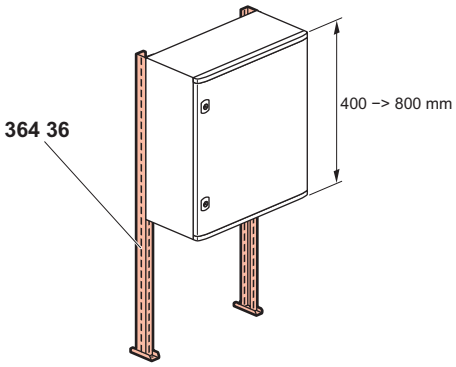

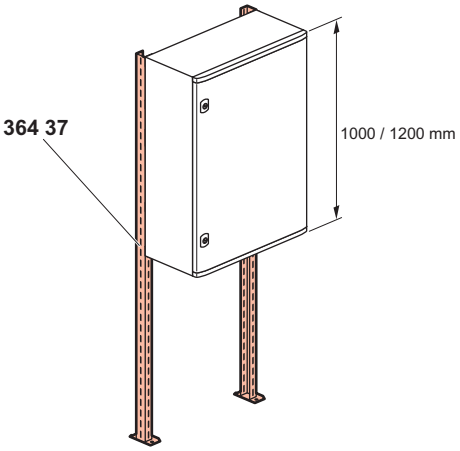

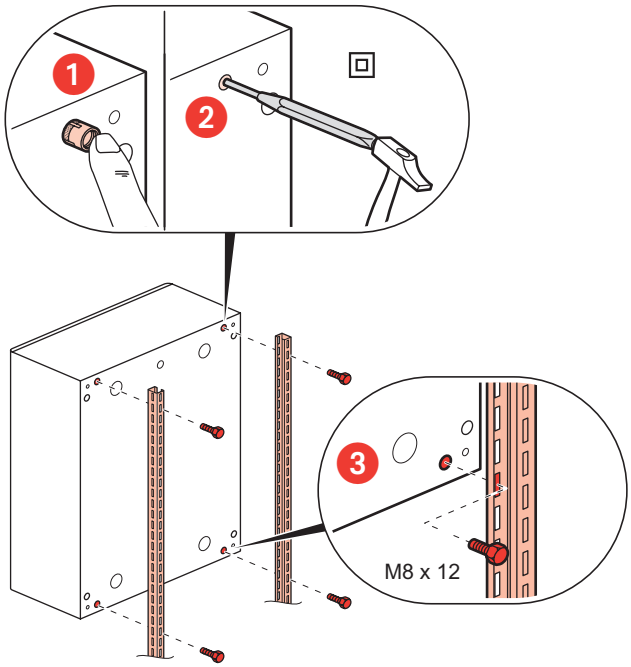

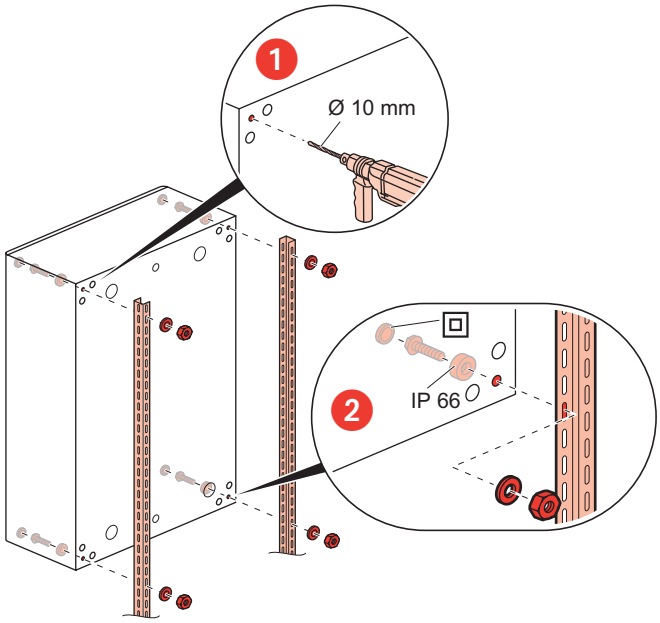

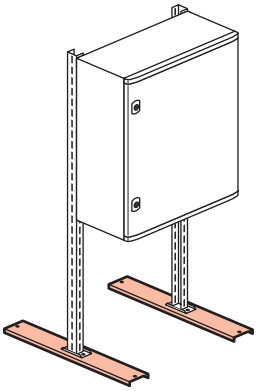

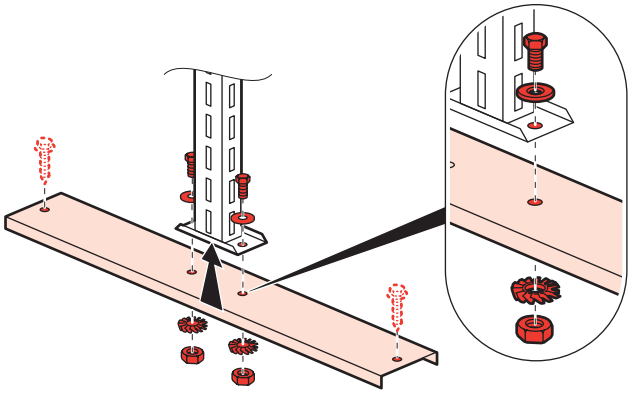

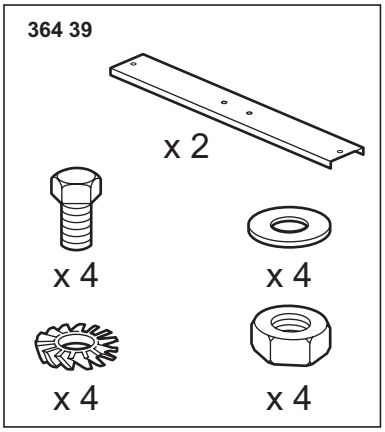

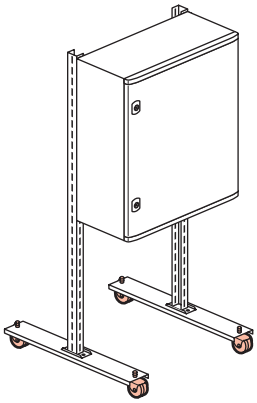

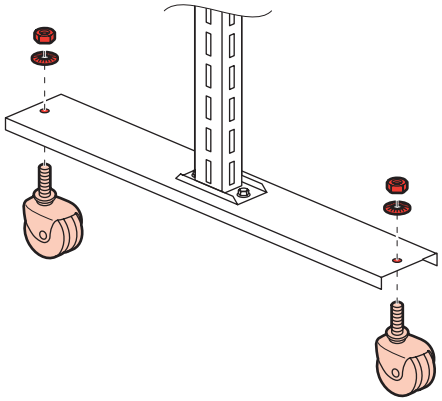

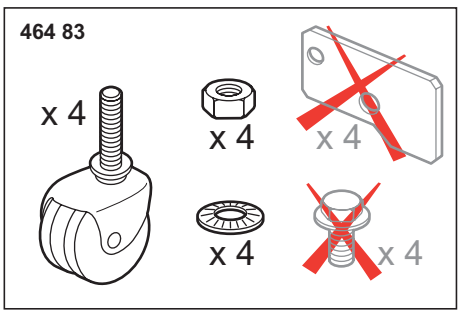

N041727/03