EM32-1B-LED

Round Hole Mounting LED Voltmeter

PRODUCT DESCRIPTION

The EM32-1B-LED is a 3 ½ digit LED voltmeter which is designed to be panel mounted in most low and medium volume applications. The meter features 8mm digit height, 3 decimal points, auto-polarity, auto-zero, 200mV full scale reading and a low current consumption. This product is designed so no soldering is required. Connection is via screw terminals, and options are selected via jumper links. The module features a round metal bezel, requiring a 32.5mm (1.28") diameter cut-out. It is secured with the nut provided. Protection from the front to IP 67 / NEMA 4X standards is achieved by placing the rubber seal between the module and panel during assembly.

FEATURES

- 8mm (0.31") Digit Height
- 200mV d.c. Full Scale Reading
- 50mA @ 5Vd.c. Operation
- Auto-zero and Auto-polarity
- Selectable Decimal Points
- Requires 32.5mm (1.28") Diameter Cut-out
- IP67 / NEMA 4X Protected



TYPICAL APPLICATIONS

- Panel Mount Instrumentation
- Process & Control
- Automotive

ORDERING INFORMATION

	Stock Number
Standard Meter	**EM32-1B-LED**

ELECTRICAL SPECIFICATIONS

Specification	Min.	Typ.	Max.	Unit
Accuracy (overall error) *		0.1		% (±1 count)
Linearity			±1	count
Sample rate		2.5		samples/sec
Operating temperature range	0		50	°C
Temperature stability		150		ppm/°C
Warm-up time		10		minutes
Supply voltage (V+ to V-)	4.75	5	5.25	V d.c.
Supply current		50	100	mA
Input leakage current (Vin = 0V)		1	10	pA

* To ensure maximum accuracy, re-calibrate periodically.
** Operation of the meter beyond the maximum supply voltage rating may cause permanent damage to the meter.

Unless otherwise noted, specifications apply at T_A = 25°C, V_{supply} = 5Vd.c. and are tested with the module configured for floating input mode.

SAFETY

To comply with the Low Voltage Directive (LVD 93/68/EEC), input voltages to the module's pins must not exceed 60Vdc. The user must ensure that the incorporation of the panel meter into the user's equipment conforms to the relevant sections of BS EN 61010 (Safety Requirements for Electrical Equipment for Measuring, Control and Laboratory Use).

LASCAR ELECTRONICS LTD.
MODULE HOUSE,
WHITEPARISH,
WILTSHIRE SP5 2SJ,
UK
TEL: +44 (1794) 884567
FAX: +44 (1794) 884616
E-mail: sales@lascar.co.uk

LASCAR ELECTRONICS INC.
4258 WEST 12th STREET,
ERIE,
PA 16505,
USA
TEL: +1 (814) 835 0621
FAX: +1 (814) 838 8141
E-mail: us-sales@lascarelectronics.com

LASCAR ELECTRONICS (HK) LTD.
8th FLOOR, CHINA AEROSPACE CENTRE,
143 HOI BUN ROAD,
KWUN TONG, KOWLOON,
HONG KONG
TEL: +852 2389 6502
FAX: +852 2389 6535
E- mail: saleshk@lascar.com.hk

DIMENSIONS

All dimensions in mm (inches)

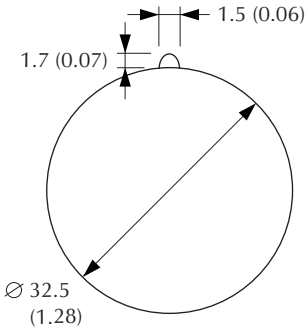

Panel cut-out

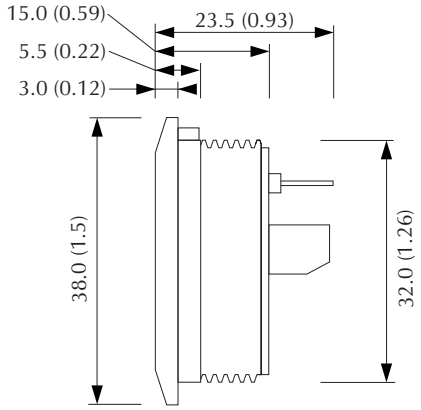

PANEL MOUNTING

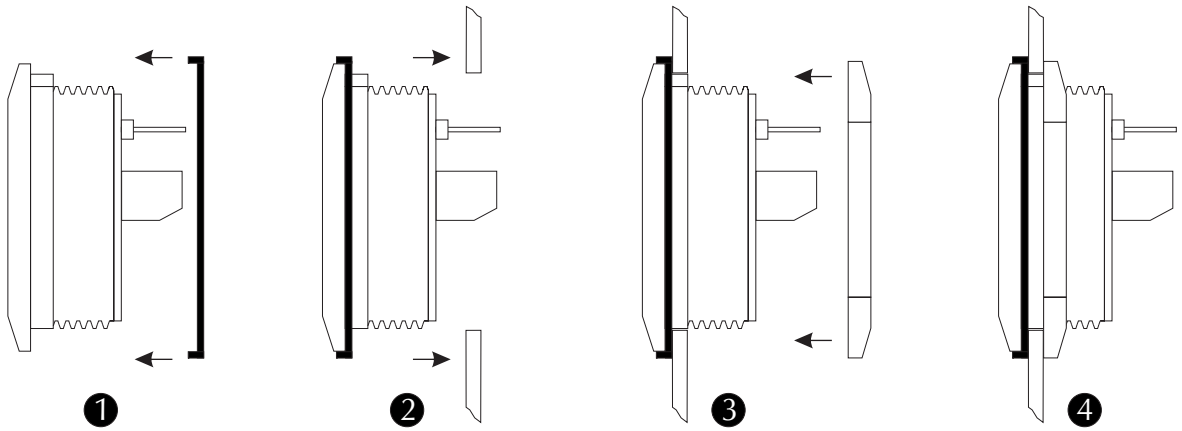

FUNCTIONAL BLOCK DIAGRAM

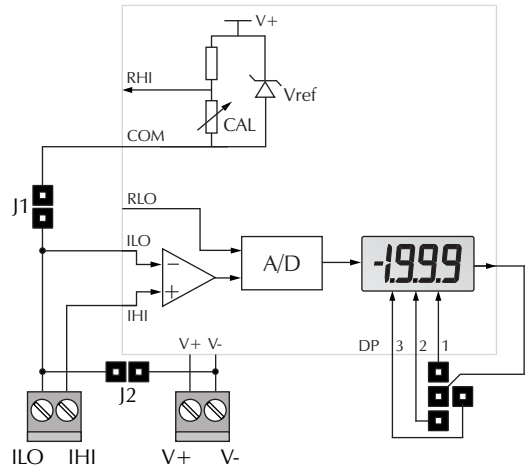

CONNECTIONS (rear view)

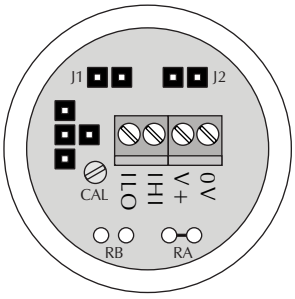

CIRCUIT DIAGRAM

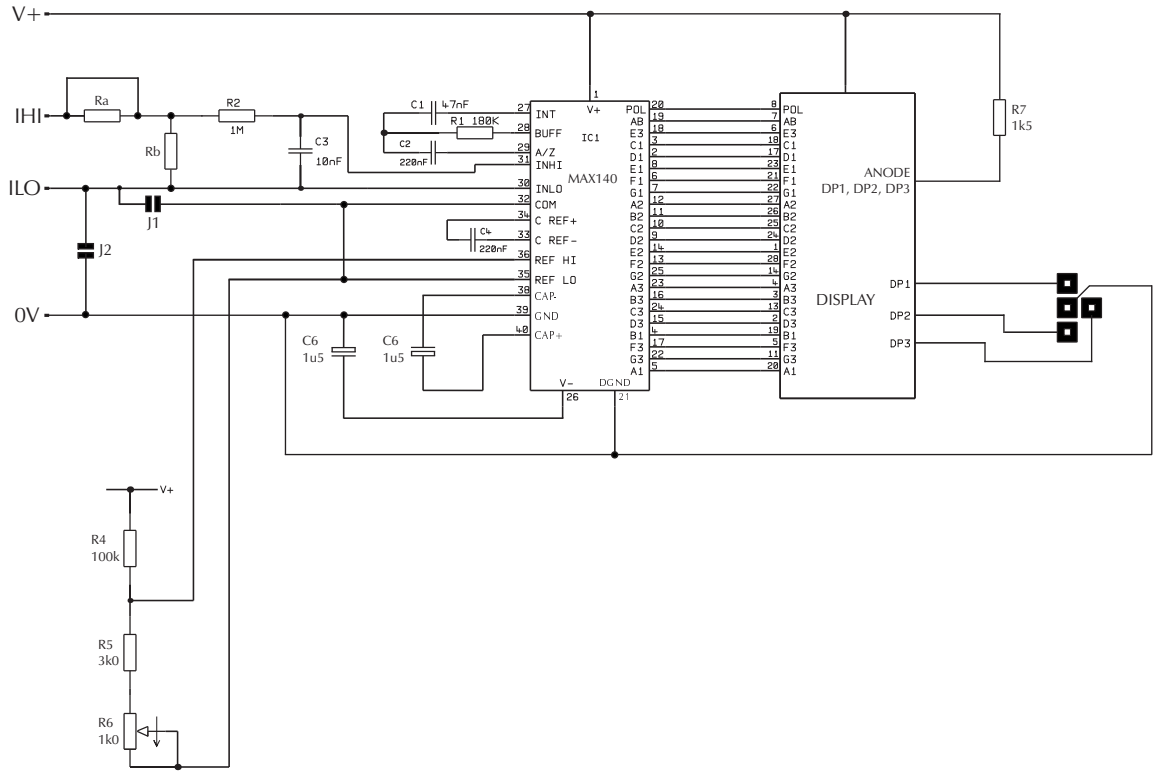

SCREW TERMINAL FUNCTIONS

0V	Negative power supply to the meter.
V+	Positive power supply to the meter (+5V nom).
IHI	Positive measuring input.
	IHI must be no closer than 1.5V to either the positive or the internal negative supply.
ILO	Negative measuring input.
	ILO must be no closer than 1.5V to either the positive or the internal negative supply.

Note:

Internal negative supply. This is generated from the supply voltage between V+ and 0V, and is negative with respect to 0V.

For example: if V+ = +5V (with respect to 0V), then the allowable common mode input range is from (V+ - 1.5V) to (V- + 1.5V) or from 3.5V to -3.5V with respect to the 0V power supply connection.

JUMPER LINKS

J1	Connects ILO to COM, when jumper link is fitted.
J2	Connects ILO to 0V, when jumper link is fitted.

SCALING

Two resistors Ra and Rb may be used to alter the full scale reading (FSR) of the meter - see table. Cut the PCB track across Ra before fitting Ra. The meter will have to be re-calibrated by adjusting the calibration potentiometer on the rear of the module.

	FSR	Ra	Rb
Voltage Vin	2V	910k	100k
	20V	1M	10k
	200V†	1M	1k
	2000V*†	1M	100R
Current Iin	200µA	0R	1k
	2mA	0R	100R
	20mA	0R	10R
	200mA	0R	1R

*Ensure that Ra is rated for high voltage use.
†Must use external scaling resistors (Do not cut track across Ra).

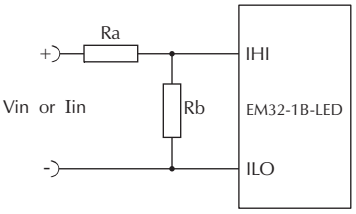

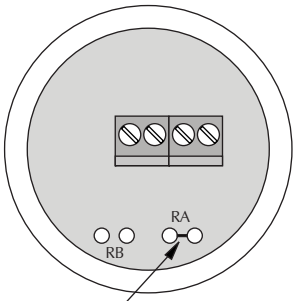

Cut the PCB track across Ra before fitting Ra.

APPLICATIONS

Do not connect more than one meter to the same power supply if the meters cannot use the same signal ground. Taking any input beyond the power supply rails will damage the meter.

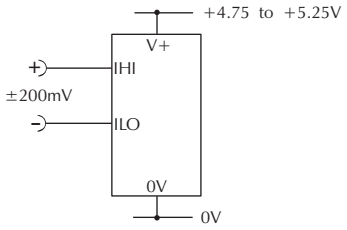

Measuring an input voltage referenced to a floating supply, i.e. the input voltage and the meter's power supply are isolated from each other.
Ensure Jumper link J1 is fitted.
Ensure Jumper link J2 is not fitted.

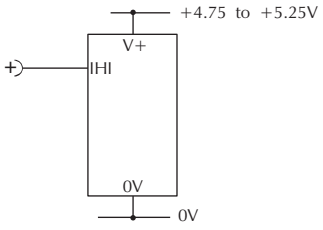

Measuring a single ended input voltage referenced to supply, i.e. the input voltage and the meter's power supply share the same 0V rail.
Ensure Jumper link J1 is not fitted.
Ensure Jumper link J2 is fitted.

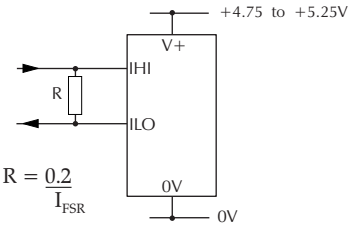

Measuring current.
The meter's supply is isolated from the current being measured.
Ensure Jumper link J1 is fitted.
Ensure Jumper link J2 is not fitted.