Accessories
Thermowell
For Temperature Sensors
THW-3-G1/2-A4-L100

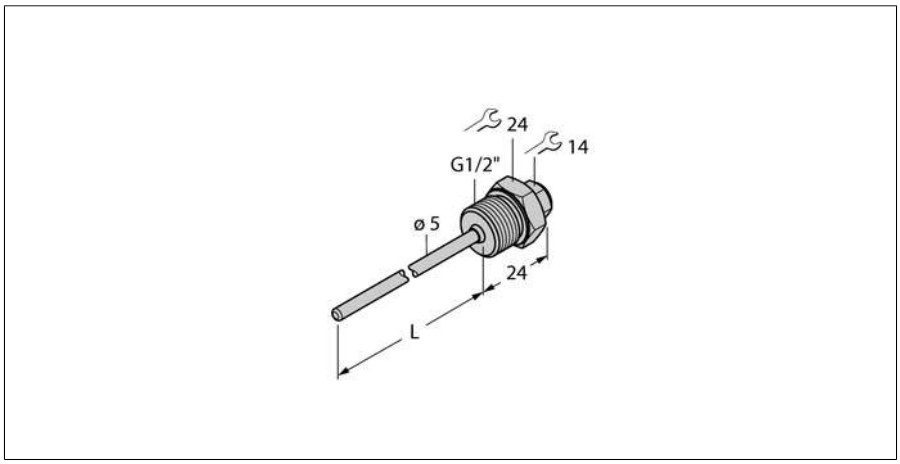

- **Thermowell for mounting temperature probes**
- **End tip diameter 3 mm**
- **Process connection G1/2" male thread**
- **Immersion depth 100 mm**

General description

Thermowells are used for unpressurized mounting of probes. They protect the probes against direct contact with the medium. The probe can be replaced without interrupting the process.

Type designation	THW-3-G1/2-A4-L100
Ident no.	9910444

Type	THW-3-G1/2-A4-L100
Ident. no.	9910444

Temperature range	
Measuring range	-50…350 °C
Temperature operating range	-58…662 °F
Immersion depth (L)	100 mm

Housing	
Housing material	Stainless steel, 1.4404 (AISI 316L)
Internal diameter	3.1 mm
Process connection	G 1/2" male thread
Pressure resistance	400 bar
Max. tightening torque of housing nut	100 Nm

Edition • 2020-11-24T09:33:23+01:00

Hans Turck GmbH & Co.KG ● D-45472 Mülheim an der Ruhr ● Witzlebenstraße 7 ● Tel. 0208 4952-0 ● Fax 0208 4952-264 ● more@turck.com ● www.turck.com