Product datasheet

Specifications



photo-electric sensor - XUK - reflex - kit - Sn 7m - 24..240VAC/DC - cable 2m

XUK1ARCNL2H60

Main

Range of product	Telemecanique Photoelectric sensors XU
Series name	Application tertiary sector
Electronic sensor type	Photo-electric sensor
Product specific application	Access detection
Sensor name	XUK
Sensor design	Compact 50 x 50
Additional information	French/english leaflet
Material	Plastic
Detection system	Reflex
Emission	Infrared reflex
[Sn] nominal sensing distance	7 m with 50 x 50 mm reflector
Wiring technique	5-wire
Cable length	2 m

Complementary

Kit composition	Reflex system photo-electric sensor Fixing bracket Mounting instructions 50 x 50 mm reflector
Enclosure material	PBT
Lens material	PMMA
Type of output signal	Discrete
Output type	Relay
Discrete output type	1 C/O
Output function governance	Light
Electrical connection	Cable
Wire insulation material	PVC
Status LED	Output state: 1 LED
Supply circuit type	AC/DC
[Us] rated supply voltage	24...240 V AC/DC with reverse polarity protection
Supply voltage limits	20…264 V AC/DC

Disclaimer: This documentation is not intended as a substitute for and is not to be used for determining suitability or reliability of these products for specific user applications

Output voltage	250 V AC
Switching capacity in mA	3 A
Switching frequency	< 20 Hz
Maximum power consumption in W	2 W
Maximum delay first up	60 ms
Maximum delay response	25 ms
Maximum delay recovery	25 ms
Net weight	0.3 kg

Environment

Product certifications	UL CSA CE
Ambient air temperature for operation	-25…55 °C
Ambient air temperature for storage	-40…70 °C
Vibration resistance	7 gn, amplitude = +/- 1.5 mm (f = 10…55 Hz) conforming to IEC 60068-2-6
Shock resistance	30 gn (duration = 11 ms) conforming to IEC 60068-2-27
IP degree of protection	IP65 conforming to IEC 60529 (double insulation)

Packing Units

Unit Type of Package 1	PCE
Number of Units in Package 1	1
Package 1 Weight	371.0 g
Package 1 Height	6 cm
Package 1 width	17.5 cm
Package 1 Length	20 cm
Unit Type of Package 2	P06
Number of Units in Package 2	81
Package 2 Weight	42.484 kg
Package 2 Height	73.5 cm
Package 2 width	80 cm
Package 2 Length	60 cm

Offer Sustainability

Sustainable offer status	Green Premium product
REACh Regulation	REACh Declaration
EU RoHS Directive	Compliant EU RoHS Declaration
Mercury free	Yes
RoHS exemption information	Yes
Environmental Disclosure	Product Environmental Profile
Circularity Profile	End of Life Information
WEEE	The product must be disposed on European Union markets following specific waste collection and never end up in rubbish bins

Contractual warranty

Warranty	18 months

Product datasheet XUK1ARCNL2H60

Dimensions Drawings

Dimensions

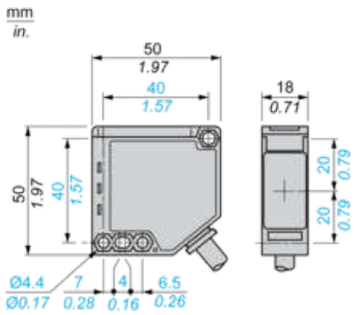

Mounting Precautions

Rigid Fixing for Trouble Free Detection

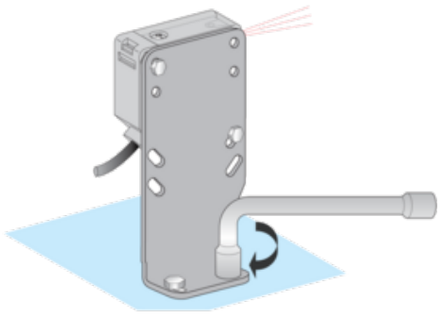

Outdoor Mounting under Protective Cover

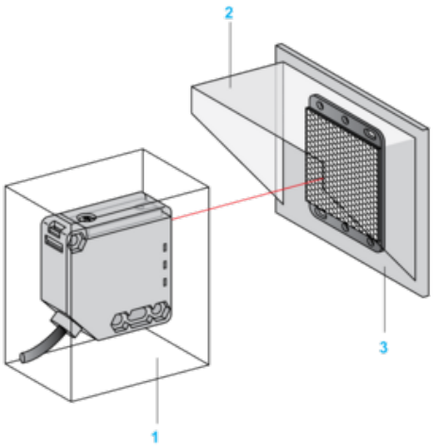

(1) Protective housing

(2) Lens hood

(3) Thermal insulator to avoid frost or condensation forming on the optical parts

Wiring Schemes

5-Wire AC or DC

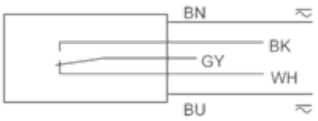

BN : Brown
WH : White
BU : Blue
BK : Black
GY : Grey

Detection Curves

Reflex System AC or DC

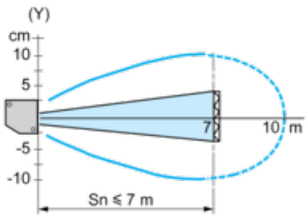

(y) Ø of beam (cm)

Detection Curves

Reflex System AC or DC

With reflector XUZC50

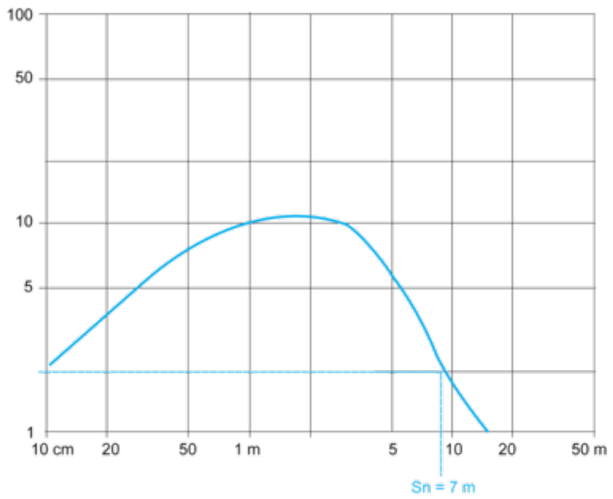

(y) Gain