TN7511

TN-045KCBD18-QFPKG/US/

Temperature sensors

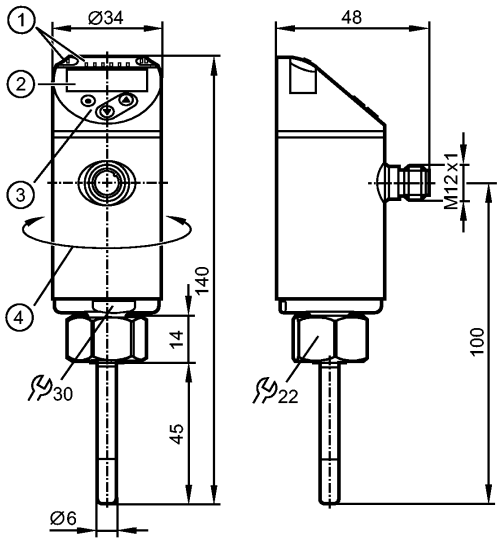

1: LEDs (display unit / switching status)
2: 4-digit alphanumeric display / alternating indication of red and green
3: Programming buttons
4: Upper part of the housing can be rotated by 345°

Product characteristics		
Electronic temperature sensor		
Compact type for adapter		
Connector		
Process connection: internal thread M18 x 1.5 for adapter		
Installation length EL: 45 mm		
2 switching outputs		
4-digit alphanumeric display		
Measuring range: -50...150 °C / -58...302 °F		
Measuring element: 1 x Pt 1000, to DIN EN 60751, class A		
Application		
Application		liquids and gases
Pressure rating	[bar]	300
Minimum installation depth	[mm]	12
Electrical data		
Electrical design		DC PNP/NPN
Operating voltage	[V]	18...32 DC; "supply class 2" to cULus.
Current consumption	[mA]	< 50
Protection class		III
Reverse polarity protection		yes
Outputs		
Output		2 switching outputs
Output function		2 x normally open / closed programmable
Current rating	[mA]	250
Voltage drop	[V]	< 2.5
Short-circuit protection		pulsed
Overload protection		yes

efector600

TN7511

TN-045KCBD18-QFPKG/US/

Temperature sensors

Measuring / setting range			
Measuring range		-50...150 °C	-58...302 °F
Setting range			
Set point, SP		-49.8...150 °C	-57.6...302 °F
Reset point, rP		-50...149.8 °C	-58...301.6 °F
in steps of		0.1 °C	0.1 °F
Resolution			
Switching output	[K]	0.1	
Display	[K]	0.1	
Accuracy / deviations			
Switch point accuracy	[K]	± 0.3 + (± 0.1 % MS)	
Display	[K]	± 0.3 + (± 0.1 % MS)	
Temperature coefficients (in % of the span per 10 K)		0.1; In case of deviation from the reference condition 25 °C	
Reaction times			
Power-on delay time	[s]	1	
Dynamic response	T05 / T09 [s]	1 / 3 *)	
Integrated watchdog		yes	
Software / programming			
Programming options		hysteresis / window function; NO / NC; on delay, off delay; damping; display unit; current/ voltage output	
Interfaces			
IO-Link device			
Transfer type		COM2 (38.4 kBaud)	
IO-Link revision		1.1	
Environment			
Ambient temperature	[°C]	-25...80	
Storage temperature	[°C]	-40...100	
Protection		IP 67	
Tests / approvals			
EMC		DIN EN 61000-6-2 DIN EN 61000-6-3	
Shock resistance		DIN IEC 68-2-27:	50 g (11 ms)
Vibration resistance		DIN EN 60068-2-6	20 g (10...2000 Hz)
MTTF	[Years]	254	
UL approval number		K014	
Mechanical data			
Process connection		internal thread M18 x 1.5 for adapter	
Materials (wetted parts)		stainless steel (316L / 1.4404); O-ring: FKM 8 x 1.5 gr 80° Shore A	
Probe length L	[mm]	45	
Installation length EL	[mm]	45	
Housing materials		stainless steel (316L / 1.4404); PBT+PC-GF 30; PBT-GF 20; PC	
Weight	[kg]	0.204	
Displays / operating elements			
Display		Display unit Switching status	2 x LED green LED yellow

	4-digit alphanumeric display / alternating indication Measured values of red and green

Electrical connection

Connection	M12 connector; Gold-plated contacts

Wiring

Core colours

BK	black
BN	brown
BU	blue
WH	white



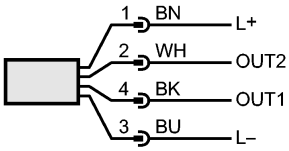

OUT1: switching output or IO-Link
OUT2: Switching output
Colours to DIN EN 60947-5-2

Remarks

Remarks	*) according to DIN EN 60751 MS = set measuring span The values for accuracy apply to flowing water. cULus - Class 2 source required
Pack quantity [piece]	1