

KS 45

Universal industrial controller

Compact design
Top-hat rail mounting
Display & operating functions
Communication features
2-point, 3-point, 3-point stepping, continuous control
Fast cycle times
Two universal inputs& universal output
Timer and programmer
Customer-specific linearization
Auto/manual switchover

rail line

FEATURES

- Compact design, only 22.5 mm (0.87") wide
  - saves space in the control cabinet
- Clips onto top-hat DIN rail
- Plug-in screw terminals or spring-clamp connectors
  - simple connection
- Dual-line LC display with additional display elements
  - process values always in view
- Convenient 3-key operation
- Direct communication between mounted controllers, fieldbus connections via bus coupler
  - simple integration into PLC / PC
- Universal input- also reduces stock keeping
- Second analog input
  - for external setpoint or heating current
  - as universal input (optional)
- Universal high-resolution output as combined voltage/current output
- Two output relays or optocoupler outputs
- Fast 100 ms response
  - also suitable for fast signals
- 2-point, 3-point, 3-point stepping, continuous output
- Self-tuning function

APPLICATIONS

- Furnaces
- Burners & boilers
- Plastics processing
- Driers
- Climatic chambers
- Heat treatment
- Sterilizers
- Oxygen content control
- etc.

DESCRIPTION

The universal KS 45 controllers are designed to provide precise and cost-effective temperature control in practically all branches of industry. The controller output is configurable as signaller, 2-point or continuous PID control, 3-point control with optional split range, and 3-point stepping control.

A universal input is provided for the process value signal. A second analog input is available for heating current measurement or for an external setpoint signal. Every KS 45 has at least one universal input and two switching outputs. Depending on version, the controller has a universal output or optocoupler outputs. The universal output is configurable as a voltage or current signal, for controlling solid-state relays, or as a transmitter supply signal.Galvanic isolation is provided between inputs and outputs as well as from the supply voltage and the communication interfaces.

Mounting

The compact KS 45 is clipped onto a top-hat DIN rail, and can also be unmounted very simply.
All connections are of the plug-in type, so that a controller can be replaced very quickly without disturbing the wiring.

Display and operation

The dual-line LC display permits simultaneous indication of the measured value and all of the unit's operating functions.
Moreover, a LED and 4 other display elements give a reliable indication of operating status, operating mode, and error messages.
The user-configurable engineering unit of the measured value can be included in the display. By means of the extended Operating Level, it is possible to show any signal or parameter in the 2nd display line.

Interfaces and Engineering Tools

The controller settings are also configurable by means of an Engineering Tool. Via the BlueControl® software (which includes a controller simulation), and especially the convenient connection via the BluePort® front interface, the user can solve the task in hand without having to work through operating instructions. Of course, practically all settings can also be made from the controller front.
Moreover, the KS 45 can exchange data with superordinate systems and PCs via an optional RS 485 interface

with Modbus RTU protocol that is fitted into the top-hat DIN rail.

Devices with option system interface can be connected via bus coupler to fieldbusses.

Password protection

If required, unauthorized access to the various Operating Levels can be prevented with a password, or an entire level can be blocked.

TECHNICAL DATA

INPUTS

Survey of inputs

Input	Purpose
INP1	As INP2 default; X1 (process value 1), universal input
INP2 (mA DC)	External setpoint, process value X1; Input for additional limit monitoring and display
INP2 (mA AC) (option)	External setpoint, heating current; Process value X1; Input for additional limit monitoring and display
INP2 (universal) (option)	X2 (process value 2), universal input, external setpoint, Process value X1; Input for additional limit monitoring and display
di1	Operation disabled; Reset of stored alarms; Switchover to 2nd setpoint SP.2, external setpoint, fixed output value Y.2, manual operation, controller 'off', 2nd process value.

UNIVERSAL INPUT INP1

Resolution: >14 bits
Decimal point: 0 to 3 decimals
Digital input filter: adjustable 0.0...999.9 s
Scanning cycle: 100 ms
Linearization: 15 segments, adaptable with BlueControl®
Measurement value correction: 2-point or offset
Type: single-ended (except for thermocouples)

Thermocouples (Table 1)

Input resistance: ≥1 MΩ
Influence of source resistance: 1 µV/Ω
Input circuit monitor: sensor break, polarity

Cold-junction compensation

- Internal
  - additional error: typical ≤± 0.5 K
    max. ≤ +1.2 K
- External: 0 ...100 °C

Break monitoring

Sensor current: ≤1 µA
Operating sense configurable

Table 1: Thermocouple input

Thermocouple type		Measurement range		Error	Typical resol.(∅)
L	Fe-CuNi (DIN)	-100...900°C	-148...1,652°F	≤ 2K	0.1 K
J	Fe-CuNi	-100...1,200°C	-148...2,192°F	≤ 2K	0.1 K
K	NiCr-Ni	-100...1,350°C	-148...2,462°F	≤ 2K	0.2 K
N	Nicrosil/Nisil	-100...1,300°C	-148...2,372°F	≤ 2K	0.2 K
S	PtRh-Pt 10%	0...1,760°C	32...3,200°F	≤ 2K	0.2 K
R	PtRh-Pt 13%	0...1,760°C	32...3,200°F	≤ 2K	0.2 K
T**	Cu-CuNi	-200...400°C	-328...752°F	≤ 2K	0.05 K
C	W5%Re-W26%Re	0...2,315°C	32...4,199°F	≤ 3K	0.4 K
D	W3%Re-W25%Re	0...2,315°C	32...4,199°F	≤ 3K	0.4 K
E	NiCr-CuNi	-100...1,000°C	-148...1,832°F	≤ 2K	0.1 K
B*	PtRh-Pt6%	0(400)...1,820°C	32(752)...3,308°F	≤ 3K	0.3 K
Special		-25 … 75 mV		≤ 0.1%	0.01%

** Values apply from 400°C upwards.*
***Values apply from -80°C upwards.*

Table 2: Resistive inputs

Type	Sensor current	Measurement range		Error	Typical resol. (∅)
Pt100***	≤ 0,25 mA	-200..100(150)°C	-328...212(302)°F	≤ 1 K	0.1 K
Pt100		-200...850°C	-328...1,562°F	≤ 1 K	0.1 K
Pt1000		-200...850°C	-328...1,562°F	≤ 2 K	0.1 K
KTY 11-6*		-50...150°C	-58...302°F	≤ 2 K	0.1 K
Special*		0...4,500 Ω**		≤ 0.1%	0.01%
Special*		0...450 Ω**		≤ 0.1%	0.01%
Poti		0...160 Ω**		≤ 0.1%	0.01%
Poti		0...450 Ω**		≤ 0.1%	0.01%
Poti		0...1,600 Ω**		≤ 0.1%	0.01%
Poti		0...4,500 Ω**		≤ 0.1%	0.01%

** Default setting is the characteristic for KTY 11-6 (-50...150°C)*
*** Including lead resistance*
**** up to 150°C at reduced lead resistance (max. 160 Ω)*

Table 3: Current and voltage input

Measurement range	Input resistance	Error	Typical resol.(∅)
0...10 Volt	≈ 110 kΩ	≤ 0.1 %	0.6 mV
-10...10 Volt	≈ 110 kΩ	≤ 0.1 %	1.2 mV
-5...5 Volt	≈ 110 kΩ	≤ 0.1 %	0.6 mV
-2,5...115mV*	> 1 MΩ	≤ 0.1 %	6 µV
-25...1150mV*	> 1 MΩ	≤ 0.1 %	60 µV
-25...90mV*	> 1 MΩ	≤ 0.1 %	8 µV
-500...500mV*	> 1 MΩ	≤ 0.1 %	80µV
-200...200mV*	> 1 MΩ	≤ 0.1 %	40 µV
0-20 mA	20 Ω	≤ 0.1 %	1.5 µA

** For INP1: high-impedance, without break monitoring*
for INP2: high impedance, break monitoring always active

Resistance thermometer (Table 2)

Connection technique: 3-wire or 4-wire (not available if using INP2)
Lead resistance: (for max. end of span) max. 30 Ω
Input circuit monitoring: break and short circuit

Measurement span

Separated into ranges
Physical measurement range: 0...4,500 Ω

The BlueControl® software enables the internal characteristic curve for the KTY 11-6 temperature sensor to be adapted.

Current and voltage measurement (Table 3)

Span start and span: anywhere within the measurement range
Scaling: freely selectable, –1,999...9,999
Input circuit monitoring (current): 12.5% below span start (2 mA)

O_2- measuring (option)

EMI-measuring by means of INP1 (high-impedance mV-inputs) suitable for probes with

– constant sensor temperature (heated probes), setting by means of parameter

– measured sensor temperature (non-heated probes), measuring by means of INP2

ADDITIONAL INPUT INP2 (CURRENT)

Resolution:	>14 bits
Digital input filter:	adjustable ,0.0...999.9 s
Scanning cycle:	100 ms
Linearization:	as for INP1
Measurement value correction:	2-point or offset
Type:	single-ended

Current measurement

Input resistance:	approx. 49 Ω
Span start and span:	anywhere between 0 and 20 mA
Scaling:	freely selectable, –1,999...9,999
Input circuit monitoring:	12,5% below span start (2 mA)

Heating current measurement

(via current transformer)

Input resistance:	approx. 49 Ω
Measurement span:	0...50 mA AC
Scaling:	freely selectable, –1,999...999.9 A

ADDITIONAL INPUT INP2 (UNIVERSAL, OPTION)

Resolution:	>14 bits
Digital input filter:	adjustable, 0.0...9,999 s
Scanning cycle:	100 ms
Linearization:	as for INP1
Measurement value correction:	2-point or offset
Type:	single-ended except thermocouples

Thermocouples (Table 1)

Cold-junction compensation

- Internal
  - additional error:
    typical: ≤± 0.5 K
    max.: ≤ -2.5 K
- External 0...100 °C

Remaining technical data as for INP1.

Resistive sensors (Table 2)

Connection technique: 3-wire

Measurement span

Remaining technical data as for INP1.

Fig. 1: Connecting diagram (❶ = Version 1, ❷ = Version 2)

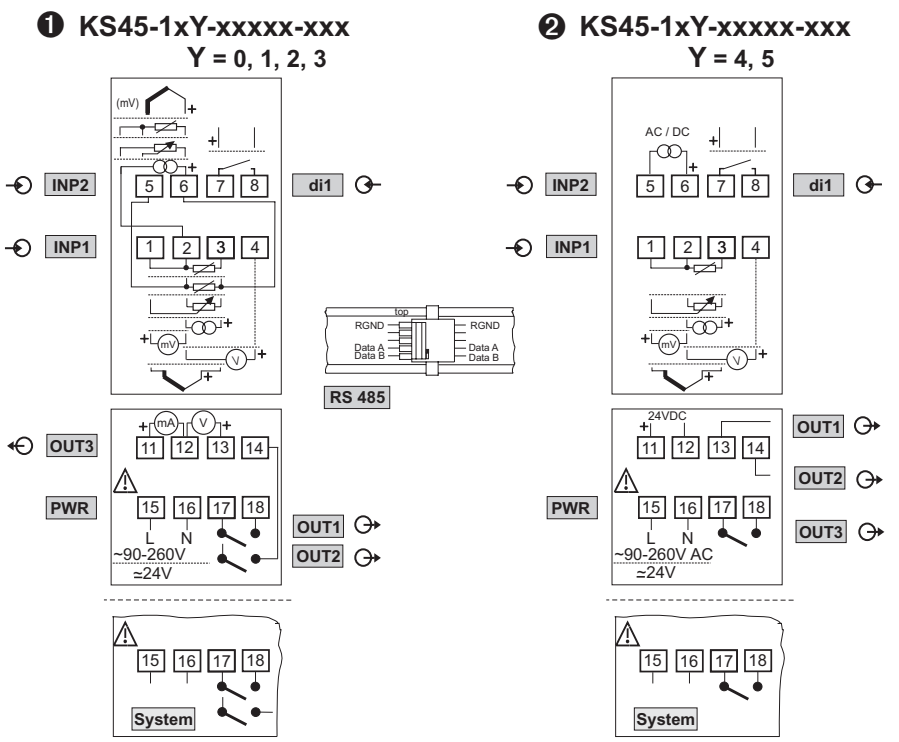

Current and voltage measurement (Table 3)

Remaining technical data as for INP1 except:

- Voltage input ranges –10 / 0...+10V and -5...+5V not possible.
- Millivolt input ranges: break monitoring always active.

CONTROL INPUT DI1

Configurable as direct or inverse switch or push button!

Contact input

Connection of potential-free contact that is suitable for switching 'dry' circuits.

Switched voltage:	5 V
Switched current:	1 mA

Optocoupler input

For active control signals.

Nominal voltage:	24 V DC, external supply
Logic '0':	-3...5 V
Logic '1':	15...30 V
Current demand:	max. 6 mA

OUTPUTS

SURVEY OF OUTPUTS

Output	Purpose
OUT,1 OUT2 (relay, optional optocoupler)	Control output 'heating' or 'cooling'(relay or optionalor Open/Closed; Limit contact; Timer; optocoupler) Programmer 'End' *
OUT3 (logic or optional relay)	Same as OUT1 and OUT2
OUT3 (continuous)	Control output; Process value; Set-point;Control deviation; Measurement values of INP1/INP2; Transmitter supply

** All logic signals can be "OR-linked".*

Output values can also be forced via interface.

RELAY OUTPUTS OUT1, OUT2, OUT3

Contact type:	normally open *
Max. contact rating:	500 VA, 250 V, 2A resistive load, 48...62 Hz,
Min. contact rating:	6V, 1 mA DC
Switching cycles (electrical):	for I=1A/2A: ≥ 800,000/500,000 (at 250V AC, resistive load)

** Versions with two relays OUT1 & OUT2 have a common terminal.*

Note:

If the relays OUT1, 2 and 3 are used to operate external contactors, these must be fitted with RC snubber circuits to manufacturer specifications to prevent excessive voltage peaks at switch-off.

OPTOCOUPLER OUTPUTS OUT1, OUT2 (OPTIONAL)

Grounded load:	common 'plus' control voltage
Switch rating:	18...32 V DC; max. 70 mA
Internal voltage drop:	≤ 1 V at I_{max}

Protective circuits: fitted as standard for short circuit, reversed polarity.

Note:

A free-wheel diode has to be fitted for inductive loads externally.

OUT3 AS UNIVERSAL OUTPUT

Parallel current/voltage output with common 'minus' terminal (combined use only in galvanically isolated circuits).

Freely scalable	
Resolution:	14 bits
Tracking error I/U:	≤ 2%
Cut-off frequency: (continuous controller)	> 2 Hz
Residual ripple:	≤±1%
(rel. to range end)	0...130kHz

Current output

0/4...20 mA, configurable, short-circuit proof.	
Control range:	-0.5...23 mA
Load:	≤700 Ω
Load effect:	≤ 0.02%
Resolution:	≤ 1.5 µA
Error:	≤ 0.1%

Voltage output

0/2...10V, configurable, not permanently short-circuit proof	
Control range:	-0.15...11.5 V
Load:	≥ 2 kΩ
Load effect:	≤ 0.06%
Resolution:	≤ 0.75 mV
Error:	≤ 0.1%
Additional error when using simultaneously the current output	≤+ 0.09%

OUT3 as transmitter supply

Output:	22 mA / ≥ 13 V DC

OUT3 as logic signal

Load ≤ 700 Ω	0/≤ 23 mA
Load > 500 Ω	0/> 13 V

GALVANIC ISOLATION

Galvanic isolation is provided between inputs and outputs as well as from the supply voltage (3-port-isolation).

Fig. 2: Galvanic isolation

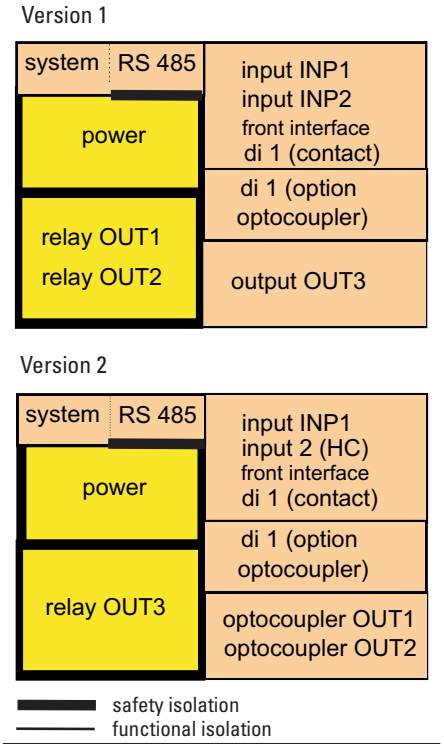

Test voltage:

Between power supply and in-/outputs:	2.3 kV AC, 1 min
Between input and output:	500 V AC; 1min

Isolation:

between in-/output against earth:	≤ 33 V AC

FUNCTIONS

Control behaviour

- Signaller with adjustable switching differential (On/Off control)
- PID controller (two-point and continuous)
- Delta / Star / Off, or two-point controller with full/partial load switchover
- 2 x PID control (Heating / Cooling, three-point, and continuous)
- Three-point stepping controller

Control parameters are adjusted automatically (self-tuning) or manually via the front panel or using the BlueControl® software package.
The KS 45 has been prepared for connecting PMATune, in order to determine the optimum control parameters, also with difficult control loops.

Setpoint functions

- Adjustable setpoint gradient 0.01...9,999 per minute
- Setpoint control
- Master/Slave control
- Program control with 4 segments (setpoint/segment times)
- Timer
- Setpoint/Program control with external shift

Timer

Time t.SP is adjustable from 0.1 to 9,999 minutes.

Timer start

- On power up
- Via control input
- Selection in extended Operating Level
- Direct selection of timer setting

Fig 3a: Timer modes 1 and 2

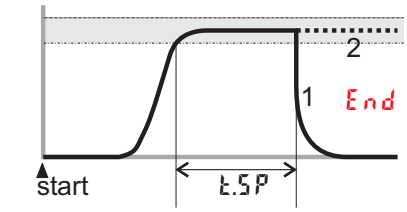

Fig 3b: Timer modes 3 and 4

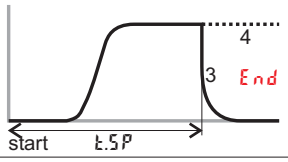

Fig 3c: Timer mode 5

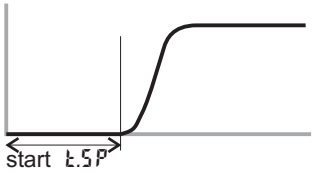

Fig 3d: Timer mode 6

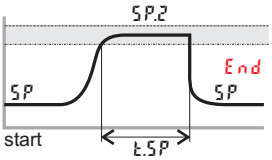

Programmer

- 4 segments, can be disabled
- Programmed time up to 9,999 minutes/segment
- Start at process value
- Program start via digital input or front panel

Process value functions

- Standard (process value X1)

Optionally:

- Ratio control ((X1 + offset)/X2)
- Difference control (X1 – X2)
- Max. value selection from X1, X2
- Min. value selection from X1, X2
- Mean value selection from X1, X2
- Switchover between X1 and X2

- Oxygen measurement* with measured or constant sensor temperature

** Precise determination of O2 content by means of Nernst equation.*

Signal manipulation

Depending on the selected sensor type, the following options are provided for manipulating the input signal:

- Measurement value correction (offset and 2-point)
- Scaling
- 1st-order filter
- Linearization with 15 segments
- Substitute value in case of an error

Behaviour on sensor break/short circuit

- Controller outputs disabled (off)
- Output of a fixed safety value
- Output of a calculated mean value (PID controllers)
- Preset substitute input value, can be disabled

Display of engineering units

The engineering unit for the measured value can either be selected from a predefined list of standard units, or it can be defined by the user (BlueControl®). The unit appears in the second line of the display.

LIMIT VALUE FUNCTIONS

Max, Min or Max/Min monitoring with adjustable hysteresis.

Monitored signals

- Process value
- Control deviation (with suppression during start-up or setpoint changes)
- Input 1, Input 2
- Setpoint
- Output value

Functions

- Input value monitoring
- Input value monitoring with storage, and reset via front panel or digital input
- Several limit values and alarm messages can be logically "OR-linked".
  Applications: Releasing a brake on motor actuators, generating a common alarm, etc.
- Limit signals can be used as control input.

ALARMS

Heating current alarm

- Overload & short circuit
- Open circuit & short circuit

Limit:	adjustable, 0 … 9,999A

Open control loop

Automatic detection, if there is no response from the process after a change in output value.

Sensor break / short circuit

Depending on the selected input type, the input circuit is monitored for break, short circuit, and reversed polarity.

MAINTENANCE MANAGER

Display of error messages, warnings, and stored limit value messages in the error list. Messages are stored, and can be reset manually.
Possible elements in the error list:

Sensor break, short circuit, incorrect polarity
Stored limit values
Heating current alarm
Control loop alarm
Fault during self-tuning
E.g. Re-calibration warning (message is generated when a predefined operating time is reached)
E.g. Maintenance interval for a switching device (message is generated when a predefined number of switching cycles is reached)
Internal fault (RAM, EEPROM, ...)

DISPLAY AND OPERATION

Display

LCD

dual-line plus additional display elements

Upper line

4 digits, 7-segment LCD for process value

Lower line

5 digits, 14-segment LCD; configurable contents (via BlueControl®)

- Setpoint
- Output value
- Engineering unit
- Parameters
- Extended Operating Level

Additional display elements

4 display elements (bars in the lower line of the LCD)

- Marked 1 & 2: OUT1 / OUT2
- Marked M: Manual operating mode
- Marked E: Entry has been made in the error list

LED

Dual-colour indicator	
Green:	OK
Green, blinking:	no data exchange with bus coupler (only for devices with system option)
Red:	limit value Lim1 exceeded
Red,	blinking: internal fault, configuration mismatch

Operating functions

Only three keys at the front of the KS 45 are used to operate process values, parameters, and configuration data. Different Operating Levels and selected parameters can be disabled by means of BlueControl®.

Switchover functions

- Display and operation of switchovers (adjustable via BlueControl®)
- Permanent display in lower LCD line
- In the extended Operating Level

A-M	Operating function for simple auto/manual switchover
Func	Operating function for simple switchover of signals, e.g. 2nd setpoint, controller off, etc.
ProG	Operating function for simple starting/stopping of the programmer

POWER SUPPLY

Depending on ordered version:

AC supply

Voltage:	90...260 V AC
Frequency:	48...62 Hz
Consumption:	approx. 7 VA max.

*Universal supply 24 V UC**

AC supply:	18...30 V AC
Frequency:	48...62 Hz
DC supply:	18...31 V DC
Consumption:	approx. 4 VA / 3W max.

Supply only with protective low voltage (SELV)

** Devices with system option:*
They are supplied via the bus connector from bus coupler or power supply module.

Behaviour with power failure

Configuration and parameter settings:Permanent storage in EEPROM

BLUEPORT® FRONT INTERFACE

Connection to the controller front via a PC adapter (see 'Additional Accessories'). The BlueControl® software enables the KS 45 to be configured, parameters set, and operated.

BUS INTERFACE (OPTIONAL)

RS 485

Connection via bus connector fitted in the top-hat rail. Screened cables should be used.

Galvanically isolated

Type:	RS 485
Transmission speed:	2,400, 4,800, 9,600, 19,200, 38,400 bits/sec
Parity:	even, odd, none
Address range:	1...247
Number of controllers per bus segment:	32

Protocol:

- MODBUS RTU

SYSTEM INTERFACE

For connection to fieldbus couplers (see system components) Connection via bus connector fitted in the top-hat rail. Technical data see data sheet 9498-737-50911.

ENVIRONMENTAL CONDITIONS

Protection mode

Front panel:	IP 20
Housing:	IP 20
Terminals:	IP 20

Permissible temperatures

For specified accuracy:	-10...55°C
Warm-up time:	< 20 minutes
Temperature effect:	≤ 0.05 % / 10 K
add. influence to cold junction compensation:	≤ 0.05% / 10 K
Operating limits:	-20...60°C
Storage:	-30...70°C

Humidity

Max. 95%, 75% yearly average, no condensation

Shock and vibration

Vibration test Fc (DIN EN 60 068-2-6)

Frequency:	10...150 Hz
Unit in operation:	1g or 0.075 mm
Unit not in operation:	2g or 0.15 mm

Shock test Ea (DIN EN 60 068-2-27)

Shock:	15 g
Duration:	11 ms

Fig. 4: Overall dimensions (in mm)

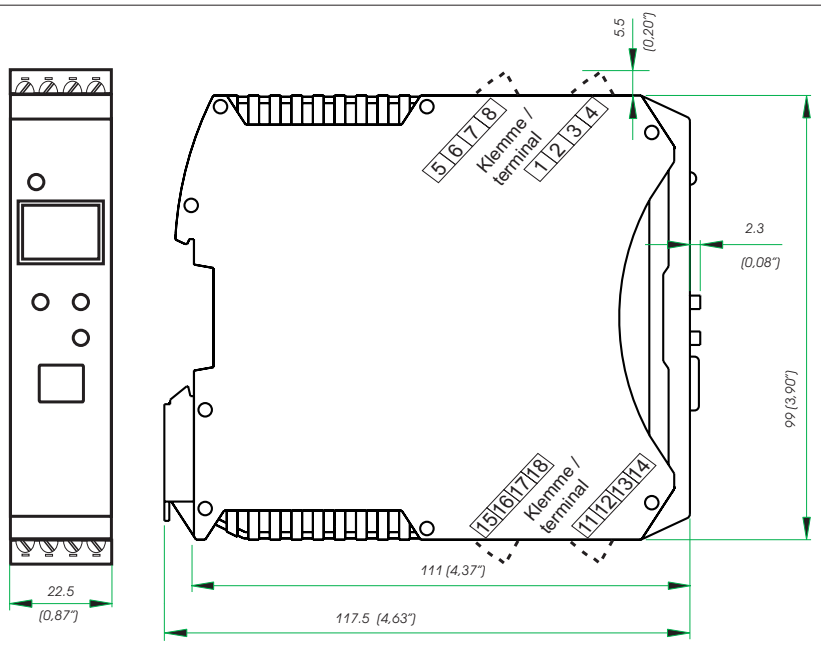

Electromagnetic compatibility

Complies with EN 61 326-1 for continuous, unattended operation.

Interference radiation:

- Within the limits for Class B devices.

Immunity to interference:
Meets the test requirements for devices in industrial areas.

Evaluation criteria:

- Surge interference partly has marked effects, which decay after the interference stops.
- With high levels of surge interference on 24 V AC mains leads, it is possible that the device is reset.
- With HF interference, effects up to 50 µV can occur.

GENERAL

Housing front

Material:	Polyamide PA 6.6
Flammability class:	V0 (UL 94)

Connecting terminals

Material:	Polyamide PA
Flammability class:	V2 (UL 94) for screw terminals V0 (UL 94) for spring-clamp terminals and bus connector

Electrical safety

Complies with EN 61 010-1

Over-voltage category II
Contamination degree 2
Protection class II

Electrical connections

Plug-in connector strips with choice of terminal type:

- Screw terminals or spring-clamp terminals, both for lead cross-sections from 0.2 to 2.5 mm^2. (AWG24-12)

Mounting method

Clip-on rail mounting (35 mm top-hat rail to EN 50 022).
Locked by means of metal catch in housing base.
Close-packed mounting possible.

Mounting position:	vertical

Weight:

0.18 kg

Standard accessories

- Operating instructions
- With 'Interface' option: bus connector for fitting into top-hat rail

CERTIFICATION

- CE certified
- Type tested to EN 14597 (replaces DIN 3440) With certified sensors applicable for:
  - Heat generating plants with outflow temperatures up to 120°C to DIN 4751
  - Hot-water plants with outflow temperatures above 110°C to DIN 4752
  - Thermal transfer plants with organic transfer media to DIN 4754
  - Oil-heated plants to DIN 4755
- cULus-certification
  (Type 1, indoor use)
  File: E 208286

ACCESSORIES

BlueControl® (Engineering Tool)

PC software package for configuring, parameter setting, and operating (commissioning) the KS 45 controller. Moreover, all settings are saved and can be printed, if required.

Depending on version, a powerful data acquisition module with trend graphics is available.

Show/hide function

The BlueControl® software enables any number of parameters and configuration setting to be shown/hidden. This ensures that only permitted parameters & settings can be changed in the controller. Safety-relevant parameters are not displayed.

Fig. 5: Hiding of interface parameters: only the address is visible

Name	Description	Visible
othr	**Other**	☑
bAud	baudrate	☐
Addr	address	☑
PrtY	parity	☐
dELY	answer delay [ms]	☐
D.Unt	display unit	☑
O2	parameter unit for O2	☑
Unit	unit	☑
dP	decimal points	☑
SEGm	display segment assignment	☑
C.dEL	modem delay [ms]	☑

Simulation function

The built-in simulation serves to test the settings.
Software requirements:
Windows 95/98/NT/2000/XP

Configuration settings made only via the BlueControl® software (not via the controller's front keys)

- Customer-specific linearization
- Enable forcing for inputs and outputs
- Setting the limits for operating hours and switching cycles
- Switch-over to 60 Hz mains frequency
- Blocking operator functions, Operating Levels, and password definition
- Text setting
- Definition of the display contents

Hardware requirements

A special PC adapter (see 'Additional Accessories') is required for connecting to the controller.

Updates and demo software from:
www.pma-online.de

Table 4: BlueControl®: Versions and functions

FUNCTIONALITY	MINI	BASIC	EXPERT
parameter and configuration setting	yes	yes	yes
controller and loop simulation	yes	yes	yes
download: transfer of an engineering to the controller	yes	yes	yes
online mode/ visualization	SIM only	yes	yes
defining an application specific linearization	yes	yes	yes
configuration in the extended operating level	yes	yes	yes
upload: reading an engineering from the controller	SIM only	yes	yes
basic diagnostic functions	no	no	yes
saving data file and engineering	no	yes	yes
printer function	no	yes	yes
online documentation, help	yes	yes	yes
implementation of measurement value correction	yes	yes	yes
data acquisition and trend display	SIM only	yes	yes
wizard function	yes	yes	yes
extended simulation	no	no	yes

Fig. 6: Accessories

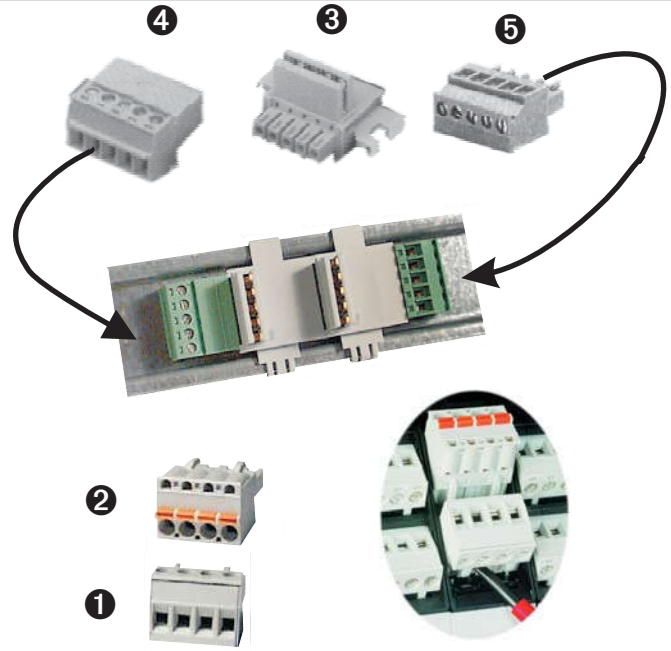

ACCESSORIES

Description	Quantity	Order no.
❶ Connector set with screw terminals	4 pcs.	9407-998-07101
❷ Connector set with spring-clamp terminals	4 pcs.	9407-998-07111
❸ Bus connector for fitting in top-hat rail	1 piece	9407-998-07121
❹ Plug for bus connection, inverted, connections at left, horizontal cable entry	1 piece	9407-998-07131
❺ Plug for bus connection, connections at right, vertical cable entry	1 piece	9407-998-07141

ADDITIONAL ACCESSORIES

Description	Language	Order no.
PC adapter for the BluePort® front interface		9407-998-00001
BlueControl® Mini	German/English	www.pma-online.de
BlueControl® with Basic license rail line	German/English	9407-999-12001
BlueControl® with Expert license rail line	German/English	9407-999-12011
PMATune PID optimization program	Single license	9407-999-06601
PMATune PID optimization program	Multiple license (5)	9407-999-06611
Current converter 50A AC		9404-407-50001

ORDERING DATA

Universal controller KS 45 K S 4 5 - 1 _ _ - _ _ 0 _ 0 - _ _ 00

1 universal input, 1 digital input		
with display and BluePort® interface		
without plug-in connector terminals	**0**	
with screw terminal connector	**1**	
90...260V AC, 2 output relays, INP2 as current input (0...20mA)		**0**
18...30VAC/18...31VDC, 2 output relays, INP2 as current input (0...20mA)		**1**
90...260V AC, mA/V/logic + 2 relays, INP2 as current input (0...20mA)		**2**
18...30VAC/18...31VDC, mA/V/logic + 2 relays, INP2 as current input (0...20mA)		**3**
90..260V AC, 2 optocoupler outputs,1 relay, INP2 as current input (0...20mA DC and 0...50 mA AC)		**4**
18...30VAC/18..31VDC, 2 optocoupler outputs., 1 relay, INP2 as current input (0...20mA DC and 0...50 mA AC)		**5**
without options		**0**
RS 485 / MODBUS - protocol		**1**
System interface (only for 24V versions)		**2**
di1 as contact input	**0**	
di1 as optocoupler input	**1**	
INP2 as universal input, O_2-measurement, di1 as contact input	**2***	
INP2 as universal input, O_2-measurement, di1 as optocoupler input	**3***	
Standard configuration		**0**
Customer-specific configuration		**9**
Standard (CE-certification)		**0**
EN 14597 certified (replaces DIN 3440)		**D**
cULus certified		**U**

* not on versions with optocoupler outputs (KS45-1x4... and KS45-1x5...)

Standard accessories:

- Operating notes
- Devices with 'Interface' option: bus connector for fitting into top-hat rail

SYSTEM COMPONENTS

Fieldbus coupler PROFIBUS DP	**RL40-112-00000-000**
Fieldbus coupler PROFIBUS DP, cULus certified	**RL40-112-00000-U00**
Power supply module	**RL40-119-00000-000**
Power supply module cULus certified	**RL40-119-00000-U00**

➢ Please also order the associated **documentation** (as separate item):

Description	Order no.
Operating instructions for KS 45 (D)	**9499-040-71818**
Operating instructions for KS 45 (E)	**9499-040-71811**
Interface description for Modbus rail line (D)	**9499-040-72018**
Interface description for Modbus rail line (E)	**9499-040-72011**
Interface description for PROFIBUS-DP (D)	**9499-040-77118**
Interface description for PROFIBUS-DP (E)	**9499-040-77111**

PMA
Prozeß- und Maschinen- Automation GmbH
P.O. Box 31 02 29
D-34058 Kassel
Tel.: +49 - 561- 505 1307
Fax: +49 - 561- 505 1710
E-mail: mailbox@pma-online.de
Internet: http://www.pma-online.de

Your local representative

Printed in Germany – Issue 06/2009 – Subject to changes without notice – 9498 737 48513