Brand of NTN corporation

Technical data

BBE50UU

Standard ball bushings closed



VISUAL (S)

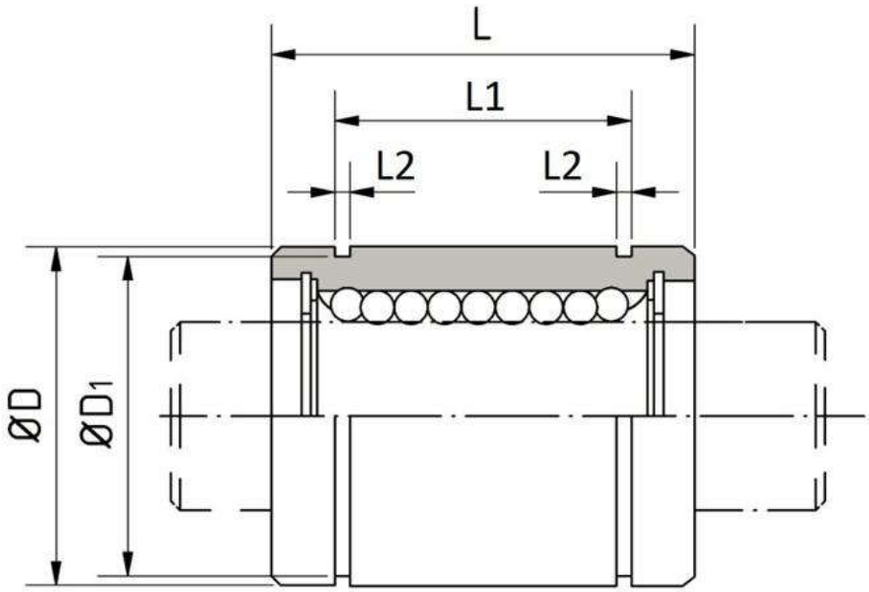

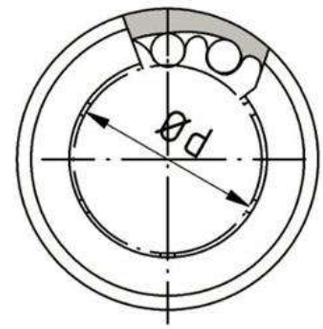

PRODUCT DEFINITION

Brand	SNR
Design type	BBE
Ball bushings category	Standard ball bushings, closed
Standard	ISO dimension
Number of seals	2
Material outer cylinder or steel segments	100Cr6
Material Cage	PA
Initial greasing	Non/No
d - Internal diameter	50 mm

BBE50UU
Standard ball bushings closed

PRODUCT DEFINITION	
d - Internal diameter tolerance	0,013/-0,002
D - External diameter	75 mm
D - External diameter tolerance	0/-0,013
L - Length	100 mm
L - Length tolerance	0/-0,3
L1	77,6 mm
L1 tolerance	0/-0,3
D1 - Diameter	72 mm
L2	2,65 mm
Number of ball rows	6
Mass	1,25 kg

PRODUCT PERFORMANCE	
Cmin	4,702 kN
Cmax	6,019 kN
C0min	7,94 kN
C0max	10,163 kN
Tmin - Min operating temperature	-20 °C
Tmax - Max operating temperature	80 °C

ESHOPDONOTDISPLAY	
Reference	BBE50UU
Image	BBE+BB_1.JPG, BBE+BB_3.JPG
Send to Eshop	Yes
Send to Paper Catalog	Yes

ESHOPDONOTDISPLAY	
Tracepart	Oui/Yes