Easy break terminal strips

Product overview

- Easily snapped to required numbered of poles
- No remaining burrs
- No tools required
- Supplied with screws in raised position
- 12 poles as standard
- Halogen free
- Passes 960°C glow-wire test according to EN 60695-2-11
- Moulded in natural UL94-V2 self extinguishing PA6
- Black available on request (MOQ may apply)
- CE approved

CTSOS





SPECIFICATION	
Rating	450VAC
Glow wire test (EN 606 95-2-11)	960°C
Working temperature	-30°C to +110°C
Moulding	UL94-V2 self extinguishing PA6
Materials: Insert crew	 Nickel plated brass Zinc plated steel

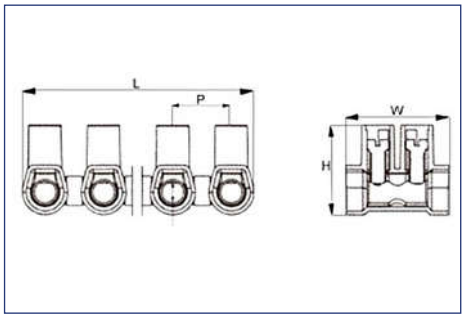

PART NO.	CONNECTING CAPACITY	MIN CONDUCTOR SECTION	TERMINAL SCREWS	LENGTH	WIDTH	HEIGHT	PITCH	MAX CURRENT
CTSOS431/12	2.5mm²	1mm²	M3	95.5mm	17.5mm	14.75mm	8mm	24A
CTSOS433/12	6mm²	2.5mm²	M3	118mm	19mm	15.6mm	10mm	41A
CTSOS434/12	10mm²	4mm²	M3.5	142mm	20.8mm	18.2mm	12mm	57A
CTSOS435/12	16mm²	6mm²	M4	160mm	23mm	21.2mm	13.5mm	76A
CTSOS438/12	35mm²	16mm²	M5	176.5mm	25.5mm	28mm	15mm	125A

KEY FEATURES

Five size options | Easily snapped to required size

CUSTOMISE ME · PRINTING ·

bsi. ISO 9001 Quality Management FM 28614 ISO 14001 Environmental Management EMS 613558

+44 (0)1638 716101 | sales@camdenboss.com | www.camdenboss.com

We operate a constant improvement policy, our products are subject to change without notice.