E43003

MOUNTING ADAPTER G3/4

Accessories

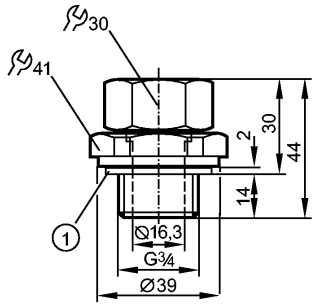

1: sealing

Made in Germany

Product characteristics		
Mounting adapter		
G ¾ D16		
Environment		
Pressure rating	[bar]	0.5
Ambient temperature	[°C]	0...80
Mechanical data		
Design		for capacitive level sensors LK, LI, LT, LL
Housing materials		flange: stainless steel; nut: stainless steel; Spacer: Brass; rubber ring: FPM (Viton); sealing: Tesnit
Tightening torque	[Nm]	6...9
Weight	[kg]	0.239
Remarks		
Pack quantity	[piece]	1