Content

1. Intended use 1
2. Scope of delivery 1
3. Dimensions 2
4. Technical data 2
4.1 General 2
4.2 Electrical data AC 3
4.3 Electrical data DC 3
5. Approvals 4
6. Commissioning 6
6.1 Safety information 6
6.2 Electrical connection PA 1 7
6.3 Electrical connection PA X 1-05 7
7. Tone settings (on the driver board in the upper part) 7
7.1 Changing the tones by external control 8
7.1.1 Stage selection via control input (TAS), AC and DC versions 8
7.1.2 Stage selection by supply via control input (TAV) – all DC versions 9
7.1.3 Stage selection by reverse polarity (TAR) - all DC versions (except option –SSM) 10
8. Option 10
9. Accessories 11
10. Maintenance, service, repairs 11
11. Decommissioning, dismantling and disposal 11
Annex “Tone type table” and “Control of tones”

Observe proprietary notice in accordance with DIN ISO 16016!

English translation

1. Intended use

Sounders of the PA series are designed for the signaling of e.g. hazardous conditions in industry, trade and construction areas. There is also the possibility of visual signaling when the sounder/flashing light combination (PA X 1-05) is used.
The sounders produce acoustic signals in 80 different tones, which can be selected using an internal switch. The external control can be used to switch over to a maximum of 3 further tones.
The devices must only be operated when undamaged and within the specified parameters. The function of the device can only be guaranteed if the upper and lower parts are correctly joined together.
The devices are designed for indoor and outdoor use and are only intended for fixed installation.

2. Scope of delivery

The scope of delivery consists of:
1x Signaling device
1x Diaphragm nipple M20
1x Quick guide
1x Resistor (only for –SSM versions)

3. Dimensions

PA 1

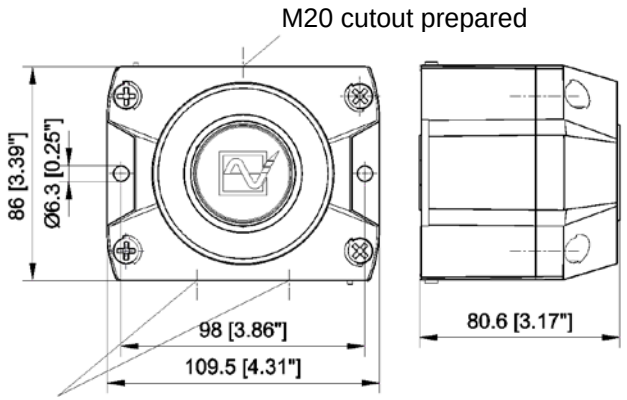

PA X 1-05

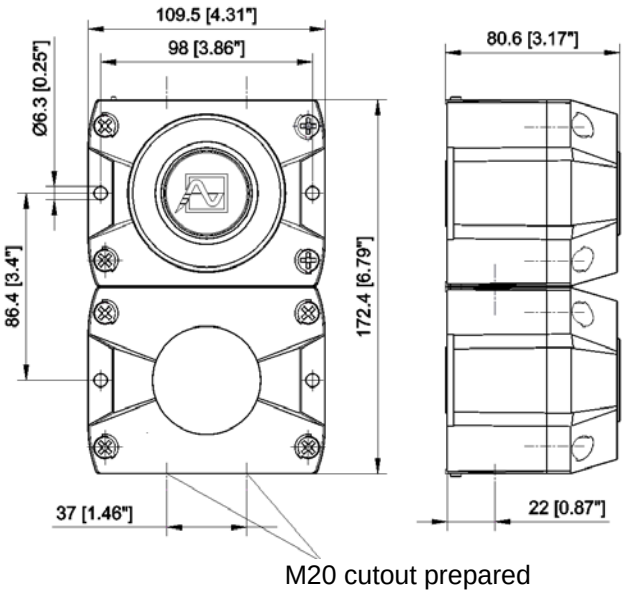

Drilling pattern inside the housing (PA 1)

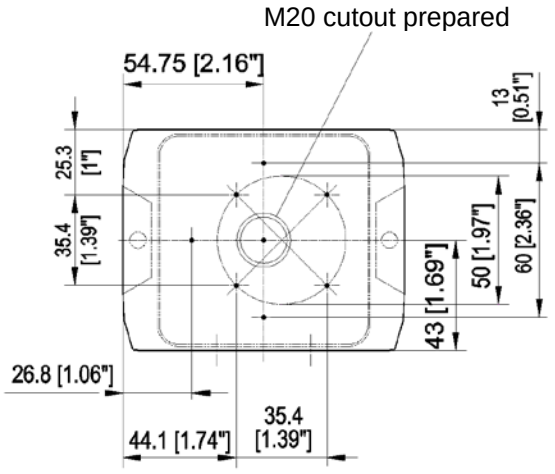

Drilling pattern inside the housing (PA X 1-05)

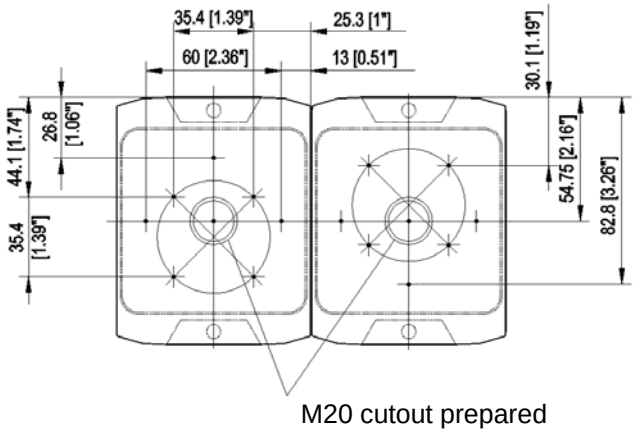

4. Technical data

4.1 General

	PA 1	PA X 1-05
Max. sound level	105 dB (A) 1m	
Volume control	max. -12dB	
Tones	80	
Flash energy	-	5 J
Flash frequency	-	1 Hz
Duty cycle	100%	
Connecting terminals	0.14 - 2.5mm² fine stranded / AWG24 - AWG 14	
Ingress protection	IP 66 (EN 60529), Type 4 & 4x	
Impact strength	IK08 (EN 50102)	
Protection class	II ⧈ double insulated equipment	

Operating temperature	-40 °C…+55 °C	
Storage temperature	-40 °C…+70 °C	
Max. rel. air humidity	90%	
Cable inlet	4x M20 pre-embossed	5x M20 pre-embossed
Sealing range of the feed-through grommet	7 – 13 mm A cable gland with a sufficient degree of protection must be provided when cable diameters of < 7 mm are used.	
Housing material	PC/ ABS Blend	
Lens material	PC	
Installation position	any	
Lens colors		transparent, white, yellow, amber, red, green, blue

4.2 Electrical data AC

	PA 1				PA X 1-05		
Rated voltage (See approvals for limit values)	24 V 50/60 Hz	48 V 50/60 Hz	115 V 50/60 Hz	230 V 50/60 Hz	24 V 50/60 Hz	115 V 50/60 Hz	230 V 50/60 Hz
Voltage range	18 – 30 V	44 – 52 V	95 – 127 V	195 –253 V	18 – 30V	95 – 127V	195 – 253V
Sounder current consumption (max)	150 mA	150 mA	30 mA	16 mA	150 mA	30 mA	16 mA
Flashing light current consumption (max)	-	-	-	-	800 mA	120 mA	90 mA
Power consumption	4.5 VA	9 VA	4.5 VA	4.5 VA	34.5 VA	18.5 VA	25 VA

4.3 Electrical data DC

	PA 1		PA X 1-05		
Rated voltage (See approvals for limit values)	24 V or 12 – 48 V	120 V DC	12 V	24 V	48 V
Voltage range	10 – 57 V	108 – 132 V	10 – 15 V	18 – 30 V	40 – 57 V
Sounder current consumption (max)	80 mA	30 mA	25 mA	70 mA	80 mA
Flashing light current consumption (max)	-		700 mA	360 mA	170 mA
Power consumption	12 – 48 V: 4 W 24 V: 2 W	3.6 W	8 W	11.5 W	11.5 W

5. Approvals

(Approvals are valid for marked devices)

<table>
<tr><td>Construction Product Regulation (CPR) (305/2011/EU)

CE 12</td><td>
PA 1: 0786-CPD-21182 PA X 1-05: 0786-CPD-21220
<table>
<tr><th></th><th>PA 1</th><th colspan="2">PA X 1-05</th></tr>
<tr><td>Options</td><td colspan="3">–SSM (24V DC)</td></tr>
<tr><td>Rated voltage</td><td>24 – 48 V DC</td><td>24V DC</td><td>48V DC</td></tr>
<tr><td>Voltage range in accordance with EN54-3, EN54-23</td><td>18 V – 57 V
Option: -SSM (18 V – 30 V)</td><td>18 - 30V</td><td>40 - 57V</td></tr>
<tr><td>Flashing light lens color</td><td>-</td><td colspan="2">red, clear</td></tr>
<tr><td>Tone

2
15
60
104
131
146</td><td colspan="3">compliant with the Construction Products Directive (CPD) (89/106/EEC)
1200Hz-500Hz (Sawtooth) DIN/PFEER P.T.A.P.
500Hz-1200Hz (Slow whoop)
825Hz (Continuous tone)
660Hz (Interrupted tone)
800Hz/ 1000Hz (Alternating tone)
544Hz/ 440Hz (NF S 32-001)</td></tr>
<tr><td>Coverage volume</td><td>EN54-3:
see document 30303-005-1</td><td colspan="2">EN 54-23 category O:
see document 30303-005-1</td></tr>
<tr><td>Environmental protection class</td><td colspan="3">Type B</td></tr>
<tr><td>Installation position</td><td>any</td><td colspan="2">see document 30303-005-1</td></tr>
<tr><td colspan="4">The test was performed using the supplied diaphragm nipple and the outer mounting bores.</td></tr>
</table>
</td></tr>
<tr><td rowspan="3">VdS</td><td>PA 1</td><td colspan="2">PA X 1-05</td></tr>
<tr><td>G 212115</td><td colspan="2">G 212188</td></tr>
<tr><td colspan="3">See Construction Product Regulation (CPR) (305/2011/EU) for data</td></tr>
<tr><td>GL</td><td colspan="3">61062-13 HH, Environmental category C, H, EMC1</td></tr>
<tr><td>MED</td><td colspan="3">MEDB00002BH</td></tr>
<tr><td>CNBOP</td><td>2015/2014</td><td colspan="2">2017/2014</td></tr>
<tr><td rowspan="4">UL, cUL</td><td colspan="4">S7256</td></tr>
<tr><td></td><td>Rated Voltage</td><td>Audible-signal Appliance
Fire Alarm Equipment
ULSZ, ULSZ7</td><td>Audible and Visual signal Appliance
General Signal Equipment
UCST, UCST7 and UEES, UEES7</td></tr>
<tr><td>PA 1</td><td>24V – 48V DC
(Fire Alarm Equipment)
12V – 48V DC
(General Signal Equipment)</td><td>x
Special application, limited operating voltage range 18 – 57 V DC</td><td>x</td></tr>
<tr><td>PA 1
PA X 1-05</td><td>24V AC
115V AC
230V AC</td><td>--</td><td>x</td></tr>
<tr><td>PA X 1-05</td><td>12V DC
24V DC
48V DC</td><td>--</td><td>x</td></tr>
</table>

No approvals for PA1, 48V AC.

PATROL sounders and combined units **PA 1/ PA X 1-05** comply with the limits for a Class B digital device, pursuant to part 15 of the FCC Rules.

UL/ cUL specifications:

Suitable for indoor and outdoor use. Signaling area: see document 30303-005-1.

Cable gland entries:

Conduit installation needs to be UL/ cUL listed fittings suitable for knockout openings. The supply wiring has to be enclosed in metal conduits for products for Fire Alarm Use.

According to CSA-C22.2 No. 205-M1983 clause 4.3.4 the connection is limited to max. three leads.

Installation:

The units shall be installed indoors or outdoors in accordance with the manufacturer's installation instructions as well as the National Electrical Code (NFPA 70) and the National Fire Alarm Code (NFPA 72) for the units evaluated for Public Fire Alarm applications in the U.S. In Canada, they shall be installed in accordance with the Canadian Electrical Code, Part 1 and the Standard for the Installation of Fire Alarm Systems CAN/ULC-S524-M91 for the units evaluated for Public Fire Alarm applications. The installation shall also be in a manner acceptable with the local authority having jurisdiction.

For audible application for Fire Alarm Service use both terminals for connection. Break wire run to provide Electrical Supervision (see UL 464 clause 39.1e). The tone no. 111 is to be used for evacuation use only (see UL 464 clause 39.1e)

cUL directional characteristics for the horn:

AXIS	ANGLE	dBA
Horizontal	32 deg. left or right	-3
Horizontal	28 deg. left or right	-6
Vertical	32 deg. left or right	-3
Vertical	28 deg. left or right	-6

Min. Output sound pressure level: [dB(A)]:

Type	**Voltage**	**UL 464 dB(A) at 10 ft ++**	**CAN/ULc-S525-07**
PA 1-24 DC	18V DC	77.1 (for tone 113)	86.2 (for tone 60)
Tone no. 2, 15, 60, 104, 131, 146, 111, 112, and 113 was used for this test.			

Connecting cables:



6. Commissioning

6.1 Safety information

	**DANGER - Danger to life due to electric shock** Voltage-carrying devices and exposed connection cables may cause electric shocks and serious accidents. ➢ Only trained and authorized electricians may work on electrical connections. ➢ Disconnect all supply lines from mains before installation and secure them against reconnection. Always ensure absence of voltage. ➢ Wait for the discharge phase of 5 minutes for the electrical components. The device should only be opened afterwards. ➢ The operating voltage must only be applied when the housing is firmly closed.
	**WARNING - Danger due to unauthorized use of the devices** Improper use may lead to serious accidents. ➢ Ensure that the connection cable is protected against pulling and twisting during installation. The devices are only intended for fixed installation. To ensure long-term function: ➢ Do not mount the sound projector pointing upwards in dusty environments or outdoors.
	**DANGER - Danger due to damage to the devices** **Non-compliance with the information on the type plate can lead to serious accidents.** ➢ Always observe the information on the type plate when installing and maintaining the devices.
	**CAUTION - Risk of injury due to sharp edges or heated components** ➢ Wear gloves during any installation, assembly or service/maintenance work. ➢ Perform wiring tasks at a distance from sharp edges, corners and internal components.
	**CAUTION - Risk of hearing impairment** ➢ Wear sound insulation equipment during work/testing to prevent hearing impairment. **CAUTION - Impairment of vision** When using the sounder/flashing light combination: ➢ Avoid constant, direct glances into the activated lights to prevent impairment of vision.

Opening the housing

1. 2.

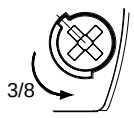



The upper part can be detached by loosening the four cover screws

Closing the housing

1. 2.

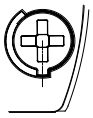

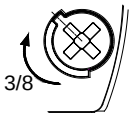

Close the housing by turning the cover screws to the end position until they lock in place.

The device is delivered in an unsealed condition.
Sealing plugs for the housing screws are available as accessories.

Cable feed-throughs

The supplied diaphragm nipple can be replaced by a cable gland or by an M12 plug-in connector with a flange dimension of M20.

➢ Only cable glands with a degree of protection of at least IP66 should be fitted to the corresponding openings.

Cable diameters of <7 mm require a cable gland with a sufficient degree of protection.

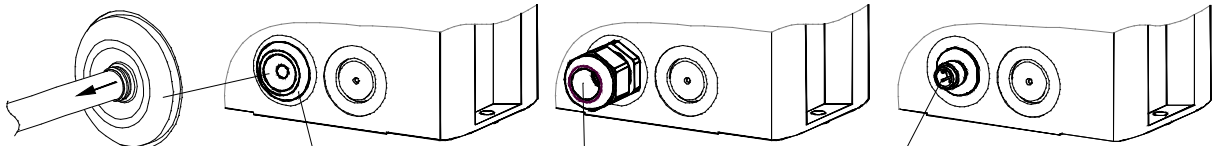

IP 66 only with the diaphragm funnel pointing outwards.

Remove the remains of the diaphragm after the cable has been fitted.

Diaphragm nipple IP 66 (supplied)

Cable gland IP 66 (option)

M12 plug-in connector IP 66, for low-voltage devices (option)

6.2 Electrical connection PA 1

Circuit board in lower part:

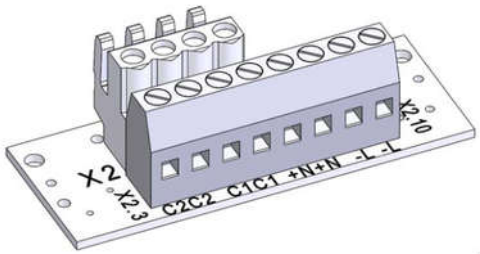

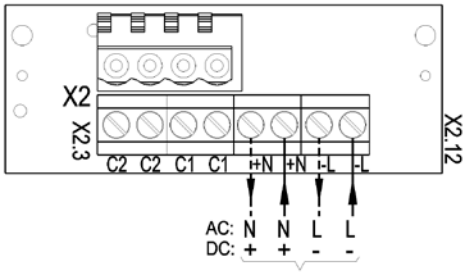

Operating voltage connection

6.3 Electrical connection PA X 1-05

Common connection of flashing light and sounder
(Factory setting)

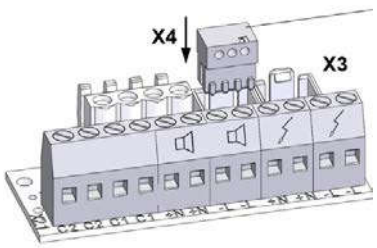

Connector from flashing light circuit board

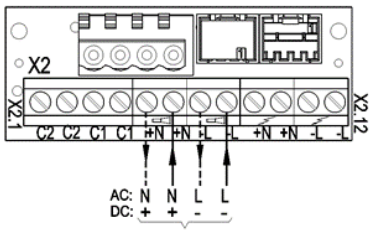

Operating voltage connection

Separate connection of flashing light and sounder

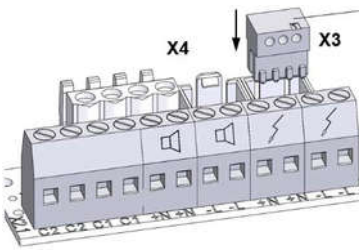

Connector from flashing light circuit board

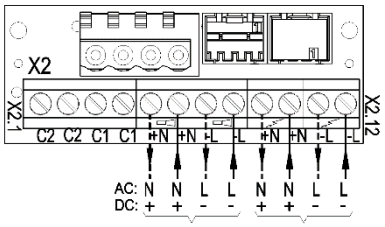

Operating voltage connection for sounder

Operating voltage connection for flashing light

7. Tone settings (on the driver board in the upper part)

The desired tone can be selected using the tone selector switch **S3** (on the driver board in the upper part). The possible tones are described in the tone type table in the Annex.
The tone is generated after the supply voltage is applied.

DC version and 48 V AC

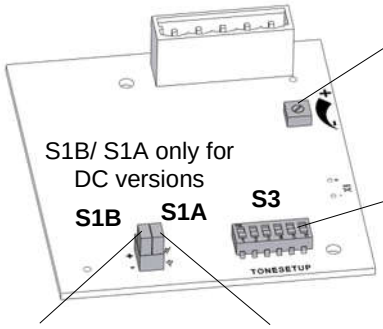

Volume control
Note:
The volume control must be in the maximum position in order to conform to EN54-3.

Tone selector switch **S3**

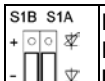	Diode not bridged Polarity negative **Factory setting**
	Diode not bridged Polarity positive
	Diode bridged Polarity negative
	Diode bridged Polarity positive

AC version

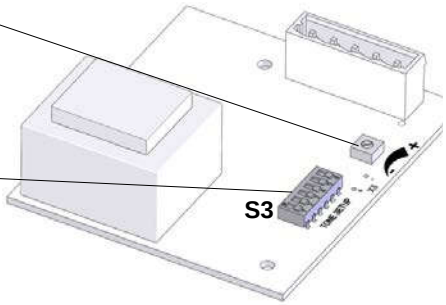

S1B (only DC)
Selection of control voltage polarity for C1 and C2

S1A (only DC)
Bridging of the reverse polarity diode

7.1 Changing the tones by external control

It is possible to obtain up to three additional tone types using the following electrical controls for applications that require additional tones in addition to the base tone.
The desired base tone (♪, see tone type table in the Annex) is always set first with the tone selector switch **S3** on the driver board. The corresponding additional tones (C1, C2, C1+C2) can be found in the "Control of tones" table in the Annex.

7.1.1 Stage selection via control input (TAS), AC and DC versions

DC version:

Note: Always apply the supply voltage together with the control inputs.

Caution: If the control voltage is higher than the supply voltage or the supply voltage is not present at all, the operating current will be supplied via the control inputs. A corresponding carrying capacity has to then be ensured.

Negative control: (Factory setting)
Switch setting should be as follows:

- **S1A** to ⏚ (diode not bridged)
- Changeover switch **S1B** to "**–**"

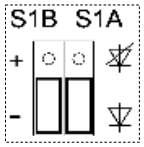

(on the driver board)

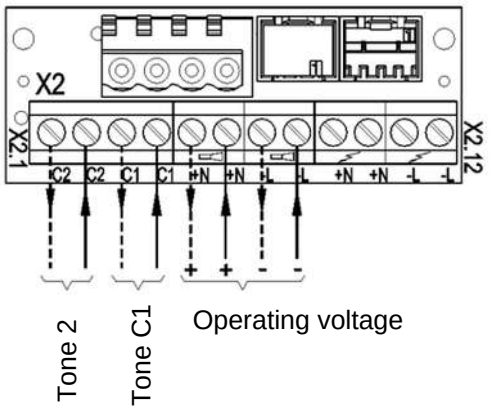

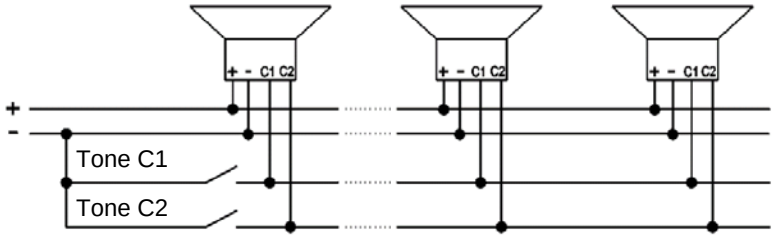

Positive control:
Switch setting should be as follows:

- **S1A** to ⏚ (diode not bridged)
- Changeover switch **S1B** to "**+**" (positive control)

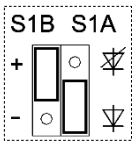

(on the driver board)

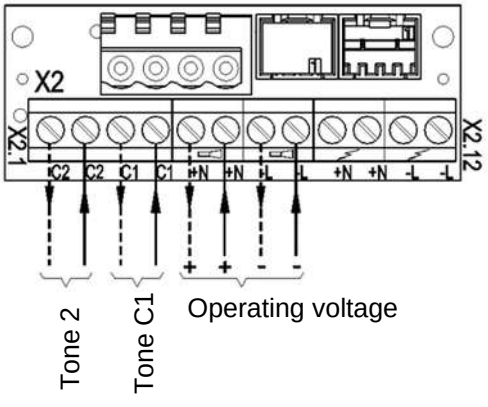

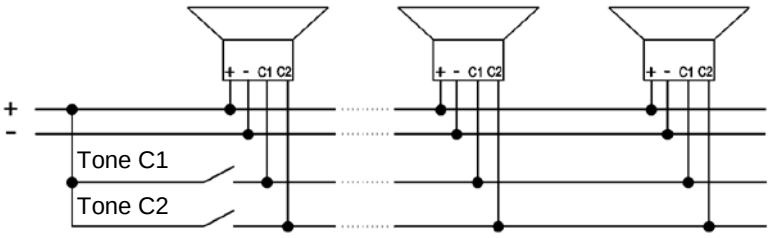

AC version:

Note: Always apply the supply voltage together with the control inputs.

24 V AC/ 115/ 230 V AC: Apply phase "**L**" of the supply voltage to the control inputs C1 / C2.

Only 48 V AC: Apply "**N**" of the supply voltage to the control inputs C1 / C2.

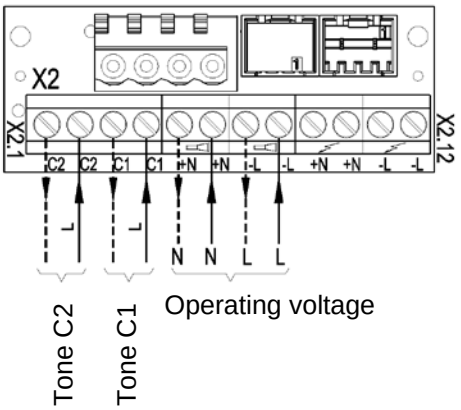

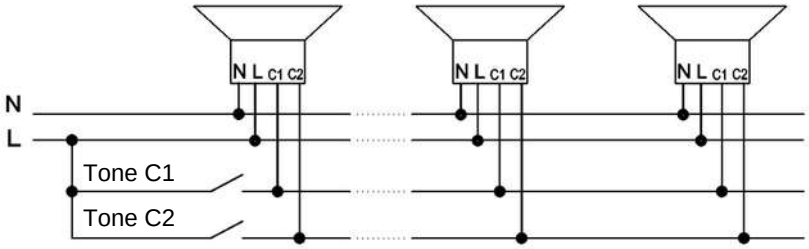

7.1.2 Stage selection by supply via control input (TAV) – all DC versions

Note: Only applicable to DC version!

The sounder can be supplied with operating voltage via the control inputs C1 / C2 on the connection board. Supply and stage selection therefore take place simultaneously.

Switch setting should be as follows:

- **S1A** to ⏚ (diode not bridged)
- Changeover switch **S1B** to "**+**"

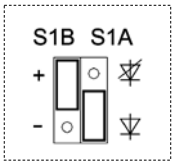

(on the driver board)

- Connect the negative terminal on the connection board.
- Connect the positive terminal on the connection board. The basic tone (♪) is generated.
- Connection of the positive voltage to C1 on the connection board generates tone C1.
- Connection of the positive voltage to C2 on the connection board generates tone C2.
- Simultaneous connection of the positive voltage to C1 and C2 on the connection board generates tone "C1+C2".

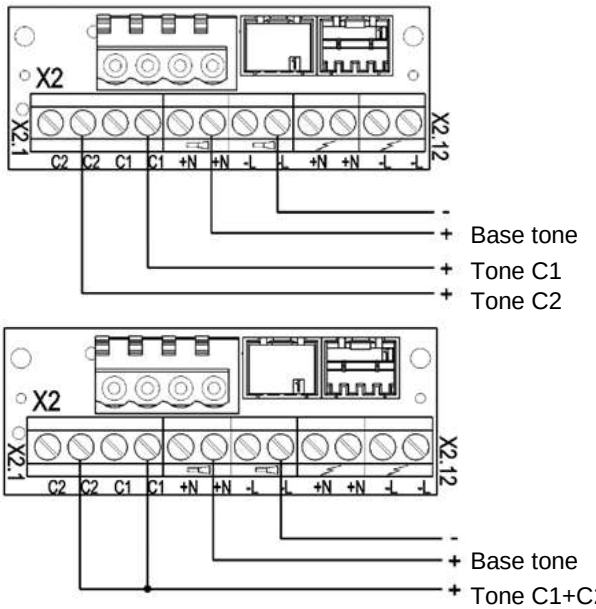

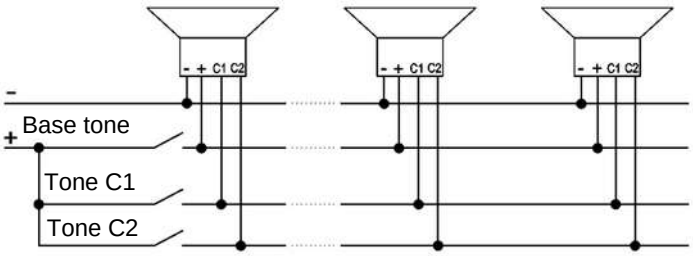

7.1.3 Stage selection by reverse polarity (TAR) - all DC versions (except option –SSM)

Note: Only applicable to DC version!
Not applicable to –SSM versions!
The control inputs C1 and C2 must not be connected on the connection board!

Switch setting should be as follows:

- **S1A** to ⏚ (diode bridged)
- and changeover switch **S1B** to "+"

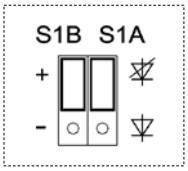

(on the driver board)

Tone "C1+C2" can also be selected by reversing the polarity of the operating voltage to the basic tone (♪):

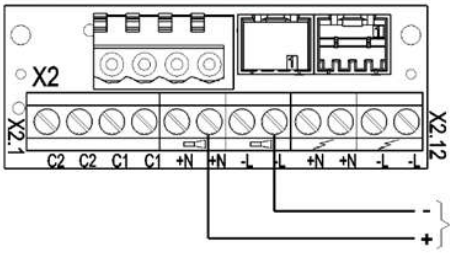

Base tone

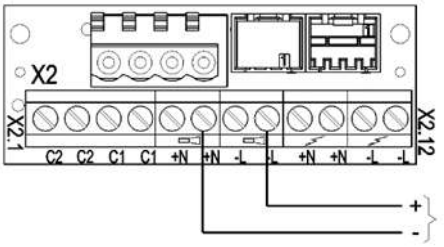

Tone "C1+C2"

8. Option

–SSM (soft-start module, only 24V DC)

The inrush current peak is limited to:

: max. 2.1 A	: max. 2.1 A

The operating voltage is only switched through to the operating equipment from >7 V.
Operating voltage range: 18 V – 30 V DC

Positioning of the resistor (1kOhm) is as follows:

- Always mount the resistor for line monitoring in the last device.
- See below for the position of the second resistor if the sounder and flashing light are connected separately.
- Remove any resistors that are not required.

Common connection of sounder and flashing light:

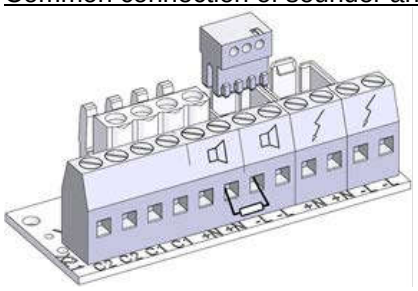

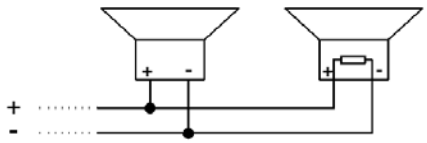

Separate connection of sounder and flashing light:

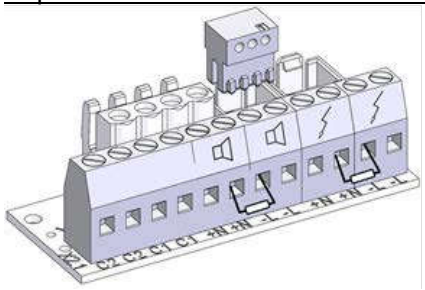

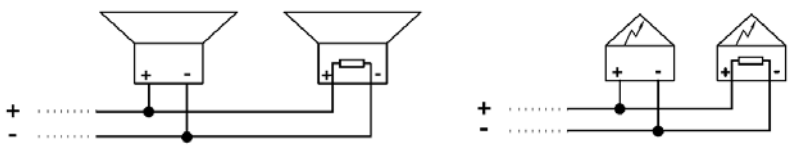

9. Accessories

Item No.	Designation
28300000002	Sealing plug, 4-pack
28912000000	Spare locking bolt, 4-pack
28300000004	Surface seal
28300000007	Control panel mounting kit PA 1

10. Maintenance, service, repairs

- Observe the Safety information during all work on the device.

The device requires no special maintenance.

- Carry out external cleaning using a weak soap solution without using any solvents.
- Only replace components using original spare parts.
- Only have repairs carried out at the manufacturer's premises.

Conversions, modifications, improper and impermissible use as well as failure to observe the notes in these operating instructions shall void any warranty.

11. Decommissioning, dismantling and disposal

- Observe the Safety information during all work on the device.
- Only properly qualified personnel should dispose of old devices in accordance with applicable environmental regulations.
- Old devices are also professionally disposed of by Pfannenberg. Delivery to one of our manufacturing facilities shall be free of charge.