PP7554

Pressure switch with ceramic measuring cell

PP-010-RBG14-QFPKG/US/ /V

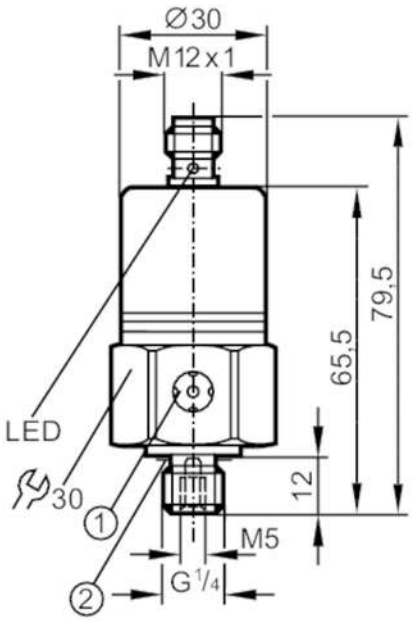

1 ventilation
2 Sealing

Product characteristics				
Number of inputs and outputs		Number of digital outputs: 2		
Measuring range		-1...10 bar	-14.5...145 psi	-100...1000 kPa	-0.1...1 MPa
Process connection		threaded connection G 1/4 external thread internal thread:M5		
Application				
Application		for industrial applications		
Media		liquids and gases		
Medium temperature	[°C]	-25...90		
Min. bursting pressure		150 bar	2175 psi	15 MPa
Pressure rating		75 bar	1087 psi	7.5 Mpa
Type of pressure		relative pressure; vacuum		
Electrical data				
Operating voltage	[V]	9.6...36 DC; (communication mode: 18...32)		
Current consumption	[mA]	< 45		
Min. insulation resistance	[MΩ]	100; (500 V DC)		
Protection class		III		
Reverse polarity protection		yes		
Power-on delay time	[s]	0.3		
Inputs / outputs				
Number of inputs and outputs		Number of digital outputs: 2		
Outputs				
Total number of outputs		2		
Output signal		switching signal; IO-Link; (configurable)		

PP7554

Pressure switch with ceramic measuring cell

PP-010-RBG14-QFPKG/US/ /V

Electrical design	PNP			
Number of digital outputs	2			
Output function	normally open / normally closed; (parameterisable)			
Max. voltage drop switching output DC [V]	2			
Permanent current rating of switching output DC [mA]	250			
Switching frequency DC [Hz]	170			
Short-circuit protection	yes			
Type of short-circuit protection	pulsed			
Overload protection	yes			
Measuring/setting range				
Measuring range	-1...10 bar	-14.5...145 psi	-100...1000 kPa	-0.1...1 MPa
Set point SP	-0.9...10 bar	-13...145 psi	-0.09...1 MPa	
Reset point rP	-0.95...9.95 bar	-14...144 psi	-0.095...0.995 MPa	
In steps of	0.05 bar	1 psi	0.005 MPa	
Factory setting		SP1 = 2.50 bar	rP1 = 2.30 bar	
		SP2 = 7.50 bar	rP2 = 7.30 bar	
		OUT1 = Hno	OUT2 = Hno	
Accuracy / deviations				
Switch point accuracy [% of the span]	< ± 0,5			
Repeatability [% of the span]	< ± 0,1; (with temperature fluctuations < 10 K)			
Characteristics deviation [% of the span]	< ± 0,25 (BFSL) / < ± 0,5 (LS); (BFSL = Best Fit Straight Line; LS = limit value setting)			
Hysteresis deviation [% of the span]	< ± 0,1			
Long-term stability [% of the span]	< ± 0,1; (per year)			
Temperature coefficient zero point [% of the span / 10 K]	0,2; (0...80 °C)			
Temperature coefficient span [% of the span / 10 K]	0,2; (0...80 °C)			
Response times				
Response time [ms]	< 3			
Damping process value dAP in steps [s]	0,003 - 0,006 - 0,010 - 0,017 - 0,060 - 0,125 - 0,250 - 0,500			
Interfaces				
Communication interface	IO-Link			
Transmission type	COM2 (38,4 kBaud)			
IO-Link revision	1.0			
Profiles	no profile			
SIO mode	yes			
Required master port type	A			
Process data analogue	1			

PP7554

Pressure switch with ceramic measuring cell

PP-010-RBG14-QFPKG/US/ /V

Process data binary		2	
Min. process cycle time	[ms]	2.3	
Supported DeviceIDs		Type of operation	DeviceID
		Default	6
Operating conditions			
Ambient temperature	[°C]	-25...85	
Storage temperature	[°C]	-40...100	
Protection		IP 68; (7 days / 1 m water depth / 0.1 bar)	
Tests / approvals			
EMC		immunity	EN 61000-6-2
		EN 61000-4-2 ESD	4 kV contact discharge / 15 kV air discharge
		EN 61000-4-3 HF radiated	20 V/m
		EN 61000-4-4 Burst	4 kV coupling clamp
		EN 61000-4-5 Surge	0,5 kV supply / 1 kV signal for DC units
		EN 61000-4-6 HF conducted	10 V
		immunity	according to the automotive directive 1995/54/EC / 04/104EG / 05/83/EG
		absorber chamber test to ISO 11452-2:	80 V/m
		EN 50155	Klasse T3, C1, S1
Shock resistance		DIN IEC 60068-2-27 / DIN IEC 60068-2-29	1000 g
		DIN EN 61373	category 3
Vibration resistance		DIN IEC 68-2-6	20 g (10...2000 Hz)
		DIN EN 60068-2-64	14 g
		DIN EN 61373	category 2
MTTF	[years]	310	
Pressure Equipment Directive		Sound engineering practice; can be used for group 2 fluids; group 1 fluids on request	
Mechanical data			
Weight	[g]	226	
Materials		stainless steel (1.4301 / 304); FKM; EPDM/X; PA	
Materials (wetted parts)		stainless steel (1.4305 / 303); ceramics; FKM	
Min. pressure cycles		100 million	
Process connection		threaded connection G 1/4 external thread internal thread:M5	
Restrictor element integrated		no (can be retrofitted)	
Displays / operating elements			
Display		operation	2 x LED, green
		switching status	2 x LED, yellow
Teach function		yes	
Remarks			
Remarks		with reference to UL: "limited voltage" with overcurrent protection in accordance with UL508	
Pack quantity		1 pcs.	

PP7554

Pressure switch with ceramic measuring cell

PP-010-RBG14-QFPKG/US/ /V

Electrical connection

Connector: 1 x M12; coding: A

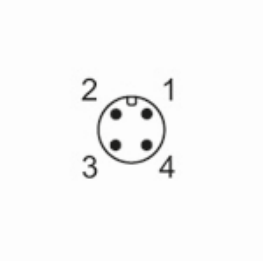

Connection

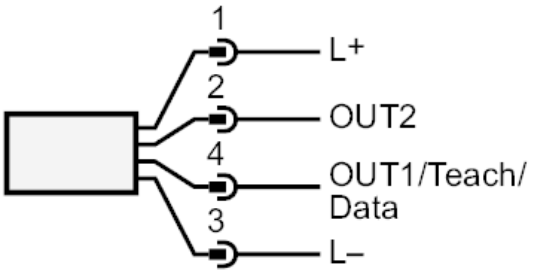

OUT1	switching output
OUT2	switching output Diagnostic output