Inductive sensor

**BES 516-325-E4-C-02**
**BES00P8**

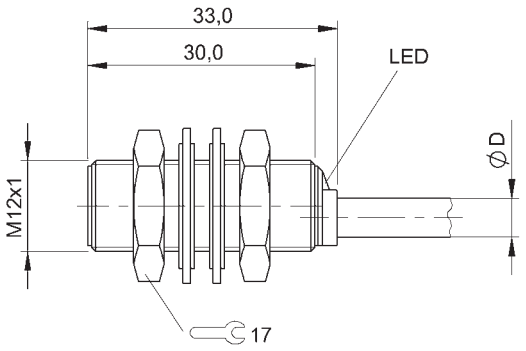


- **PNP**
- **Normally open (NO)**
- **2.00 mm**
- **Flush (shielded)**
- **Cable, PVC, 2.00 m**

**General attributes**

| | |
|---|---|
| Approvals / Conformity | CE<br>cULus<br>EAC |
| Basic standard | IEC 60947-5-2 |
| Enclosure Type per IEC 60529 | IP68 according to BWN PR 20 |
| Function indicator | Yes |
| Polarity reversal protected | Yes |
| Power indicator | No |
| Protection Class | II |
| Short circuit protected | Yes |
| MTTF (40°C) | 830 a |

**Electrical attributes**

| | |
|---|---|
| Connection type | Cable |
| Eff. operating current Ie | 200 mA |
| Eff. operating voltage Ue DC | 24.0 V |
| Electrical version | DC, direct current |
| Load capacitance max. (at Ue) | 0.500 µF |
| Max. no-load cur. Io undamped | 4.0 mA |
| Minimum operating current Im | 0 mA |
| No-load current Io damped max. | 10.0 mA |
| Operating voltage UB max. DC [V] | 30.0 V |
| Operating voltage UB min. DC [V] | 10.0 V |
| Rated insulation voltage Ui | 250 VAC |
| Rated short circuit current | 100 A |
| Ripple max. (% of Ue) | 15 % |
| Switching freq. f max. (at Ue) | 5000 Hz |
| Switching function | Normally open (NO) |
| Switching output | PNP |
| Voltage drop static max. | 2.0 V |

**Mechanical attributes**

| | |
|---|---|
| Ambient temperature Ta max. | 70 °C |
| Ambient temperature Ta min. | -25 °C |
| Assured operating distance Sa | 1.60 mm |
| Cable diameter D max. | 4.6 mm |
| Cable jacket material | PVC |
| Cable length | 2.00 m |
| Conductor cross-section | 0.34 mm² |
| Depth | 33.0 mm |
| Diameter d1 | M12x1 |
| Eff. operating distance Sr | 2.00 mm |
| Housing material | CuZn |
| Mech. installation condition | Flush (shielded) |
| Mounting length | 30.0 mm |
| Number of conductors | 3 |
| Rated operating distance Sn [mm] | 2.00 mm |
| Sensing face material | PBT |
| Surface protection | Nickel-plated |
| Tightening torque | 15 Nm |

**Remarks**
The sensor is functional again after the overload has been eliminated.

For further information on MTTF/B10d, please refer to the MTTF / B10d Certificate.

Specification of the MTTF value and the B10d value do not represent any binding quality and/or life expectancy guarantees.

