R3G220-RC05-03

EC centrifugal fan - RadiCal®

backward curved, single inlet



ebm-papst Mulfingen GmbH & Co. KG
Bachmühle 2 · D-74673 Mulfingen
Phone +49 7938 81-0
Fax +49 7938 81-110
info1@de.ebmpapst.com
www.ebmpapst.com

Limited partnership · Headquarters Mulfingen
County court Stuttgart · HRA 590344

General partner Elektrobau Mulfingen GmbH · Headquarters Mulfingen
County court Stuttgart · HRB 590142

Nominal data

Type	**R3G220-RC05-03**
Motor	**M3G055-BI**

Phase		1~
Nominal voltage	VAC	230
Nominal voltage range	VAC	200 .. 240
Frequency	Hz	50/60
Type of data definition		ml
Speed	min^{-1}	2580
Power input	W	85
Current draw	A	0.7
Min. ambient temperature	°C	-25
Max. ambient temperature	°C	60

ml = Max. load · me = Max. efficiency · fa = Running at free air · cs = Customer specs · cu = Customer unit
Subject to alterations

EC centrifugal fan - RadiCal®

backward curved, single inlet

Technical features

Mass	1.13 kg
Size	220 mm
Surface of rotor	Thick layer passivated
Material of electronics housing	Die-cast aluminium
Material of impeller	PA plastic
Number of blades	7
Direction of rotation	Clockwise, seen on rotor
Type of protection	IP 54
Insulation class	"B"
Max. permissible ambient motor temp. (transp./ storage)	+ 80 °C
Min. permissible ambient motor temp. (transp./storage)	- 40 °C
Mounting position	Any
Condensate discharge holes	None, open rotor
Operation mode	S1
Motor bearing	Ball bearing
Technical features	- Output 10 VDC, max. 1.1 mA - Tach output - Motor current limit - Soft start - Control input 0-10 VDC / PWM - Control interface with SELV potential safely disconnected from the mains - Over-temperature protected electronics / motor
EMC interference immunity	Acc. to EN 61000-6-2 (industrial environment)
EMC harmonics	Acc. to EN 61000-3-2/3
EMC interference emission	Acc. to EN 55022 (Class B, household environment), on account of the installation conditions, ferritic damping in the connection line may be required for the application.
Touch current acc. IEC 60990 (measuring network Fig. 4, TN system)	<= 3.5 mA
Motor protection	Locked-rotor protection
Cable exit	Variable
Protection class	I (if protective earth is connected by customer)
Product conforming to standard	EN 60335-1
Approval	CCC

ebm-papst Mulfingen GmbH & Co. KG · Bachmühle 2 · D-74673 Mulfingen · Phone +49 (0) 7938 81-0 · Fax +49 (0) 7938 81-110 · info1@de.ebmpapst.com · www.ebmpapst.com

EC centrifugal fan - RadiCal®

backward curved, single inlet

Product drawing

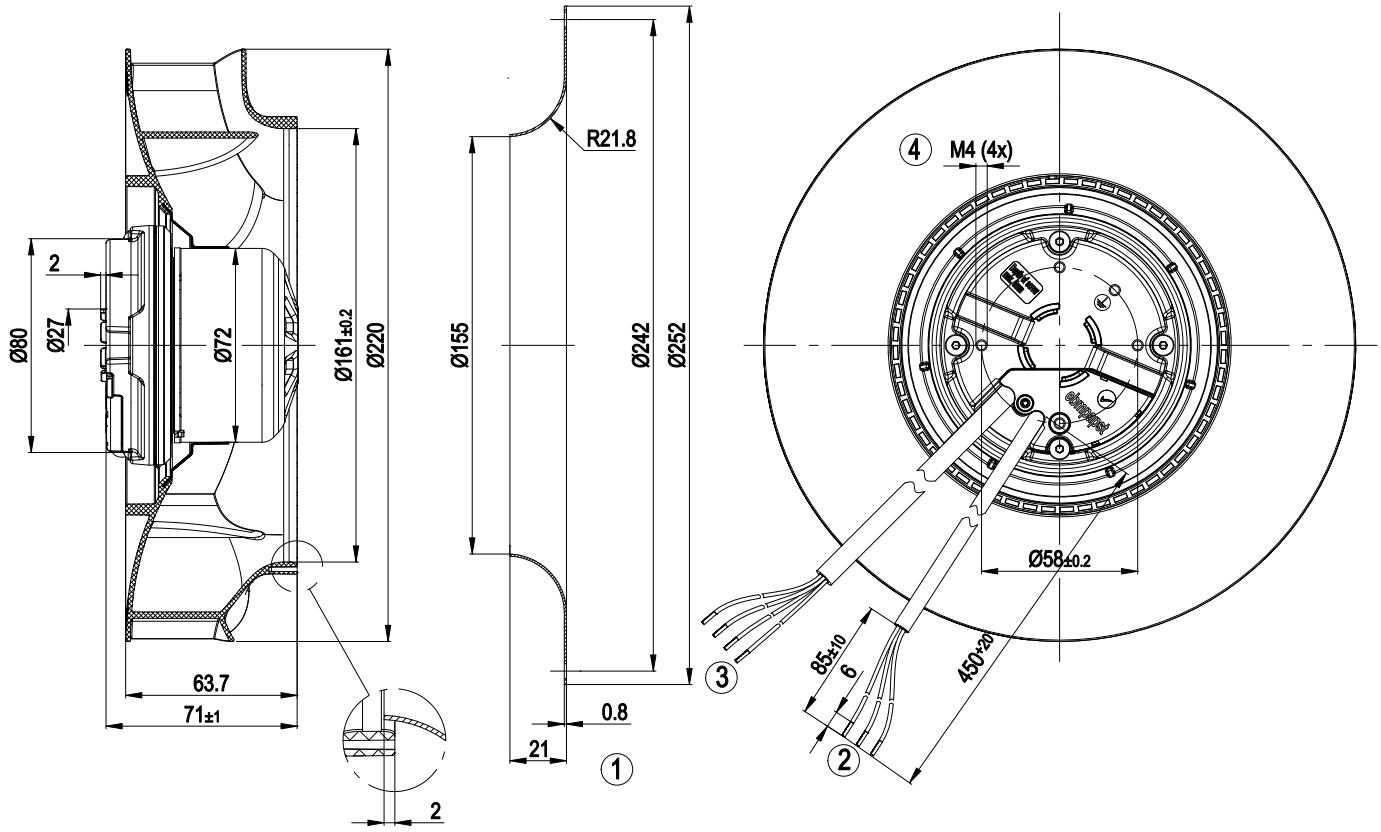

1	Accessory part: Inlet nozzle 09609-2-4013, not included in the standard scope of delivery
2	Connection line PVC 3G AWG20, 3x brass lead tips crimped
3	Control line PVC 4X AWG22, 4 x brass lead tips crimped
4	Depth of screw max. 5 mm

ebm-papst Mulfingen GmbH & Co. KG · Bachmühle 2 · D-74673 Mulfingen · Phone +49 (0) 7938 81-0 · Fax +49 (0) 7938 81-110 · info1@de.ebmpapst.com · www.ebmpapst.com

EC centrifugal fan - RadiCal®

backward curved, single inlet

Connection screen

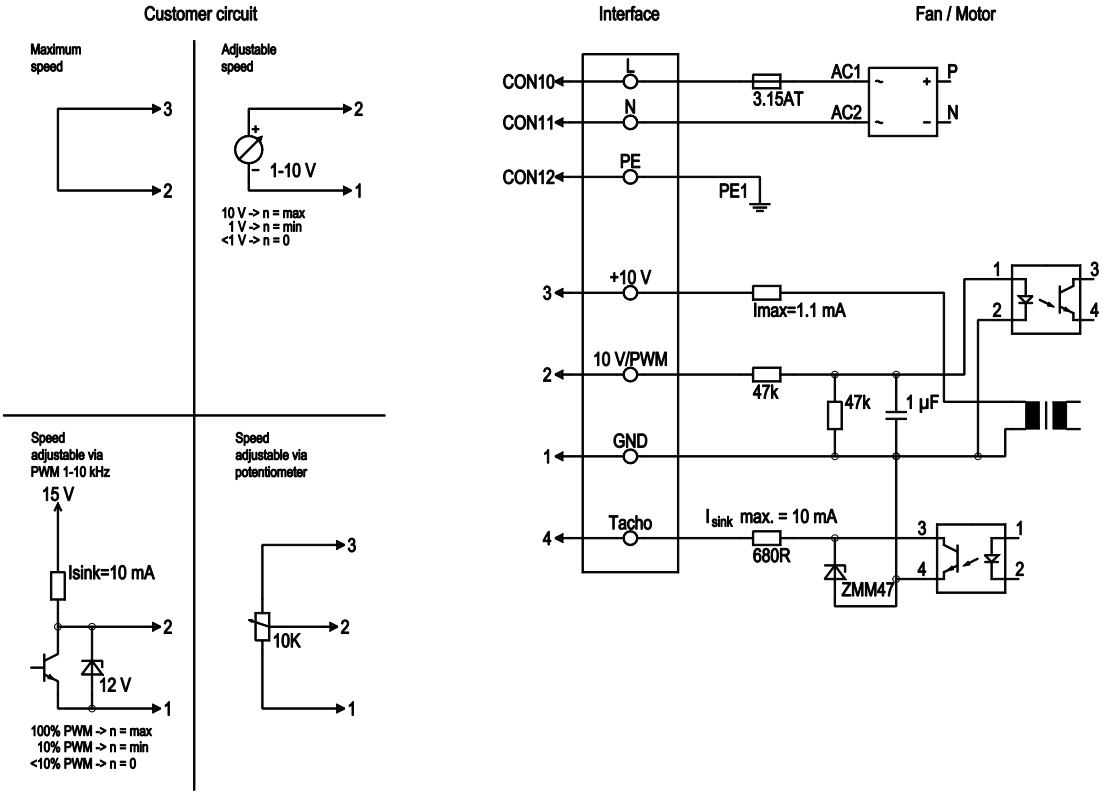

No.	Conn.	Designation	Colour	Function / assignment
	CON10	L	black	Power supply 230 VAC, 50-60 Hz, for voltage range refer to rating plate
	CON11	N	blue	Neutral conductor
	CON12	PE	green/yellow	Protective earth
	1	GND	blue	GND - Connection for control interface
	2	0- 10V PWM	yellow	Control input 0 - 10 V or PWM, electrically isolated
	3	10V/ max 1.1mA	red	Voltage output 10 V / 1.1 mA, electrically isolated, not short-circuit-proof
	4	Tach	white	Tach output: open collector, 1 pulse per revolution, electrically isolated, Isink max = 10 mA

ebm-papst Mulfingen GmbH & Co. KG · Bachmühle 2 · D-74673 Mulfingen · Phone +49 (0) 7938 81-0 · Fax +49 (0) 7938 81-110 · info1@de.ebmpapst.com · www.ebmpapst.com

EC centrifugal fan - RadiCal®

backward curved, single inlet

Charts: Air flow 50 Hz

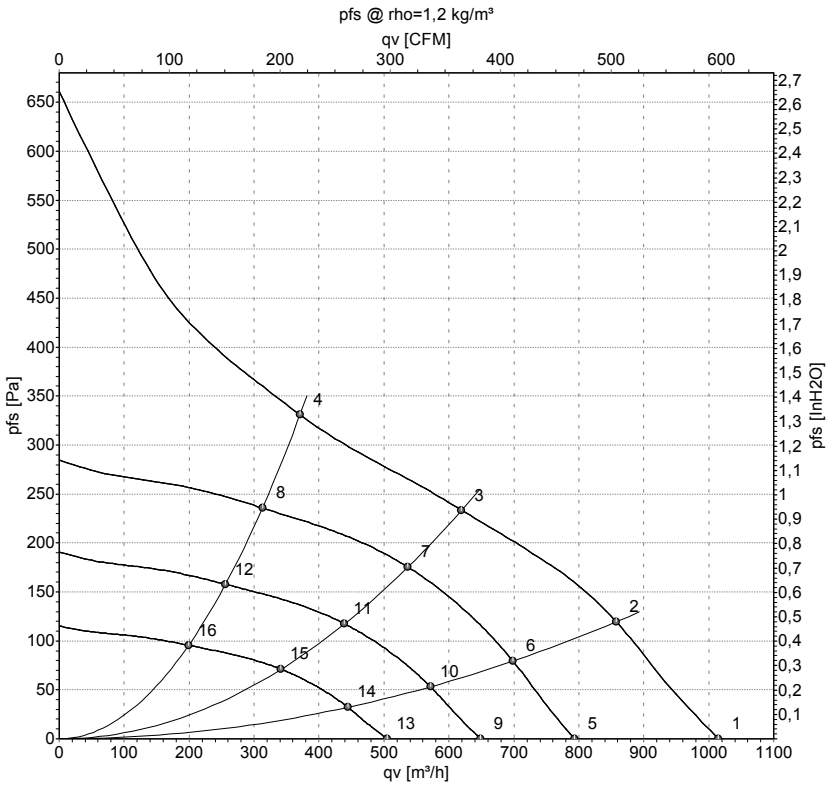

Measurement: LU-152958

Air performance measured as per ISO 5801 Installation category A. For detailed information on the measuring set-up, please contact ebm-papst. Suction-side noise levels: LwA measured as per ISO 13347 / LpA measured with 1m distance to fan axis. The values given are valid under the measuring conditions mentioned above and may vary according to the actual installation situation. With any deviation from the standard set-up, the specific values have to be checked and reviewed with the unit installed.

Measured values

	U	f	n	P_{ed}	I	qv	p_{fs}
	V	Hz	min^{-1}	W	A	m^3/h	Pa
1	230	50	2815	84	0.78	1015	0
2	230	50	2700	84	0.79	855	120
3	230	50	2580	85	0.70	620	240
4	230	50	2605	84	0.78	370	335
5	230	50	2200	40	0.37	795	0
6	230	50	2200	46	0.43	700	80
7	230	50	2200	54	0.51	535	176
8	230	50	2200	50	0.47	315	236
9	230	50	1800	22	0.20	650	0
10	230	50	1800	25	0.23	570	53
11	230	50	1800	30	0.28	440	118
12	230	50	1800	28	0.26	255	158
13	230	50	1400	10.0	0.10	505	0
14	230	50	1400	12	0.11	445	32
15	230	50	1400	14	0.13	340	71
16	230	50	1400	13	0.12	200	95

U = Supply voltage · f = Frequency · n = Speed · P_{ed} = Power input · I = Current draw · qv = Air flow · p_{fs} = Pressure increase

ebm-papst Mulfingen GmbH & Co. KG · Bachmühle 2 · D-74673 Mulfingen · Phone +49 (0) 7938 81-0 · Fax +49 (0) 7938 81-110 · info1@de.ebmpapst.com · www.ebmpapst.com