Springloaded bolt with locking system B

Model : 16-1-9007



Heavy duty range. Stop when open.

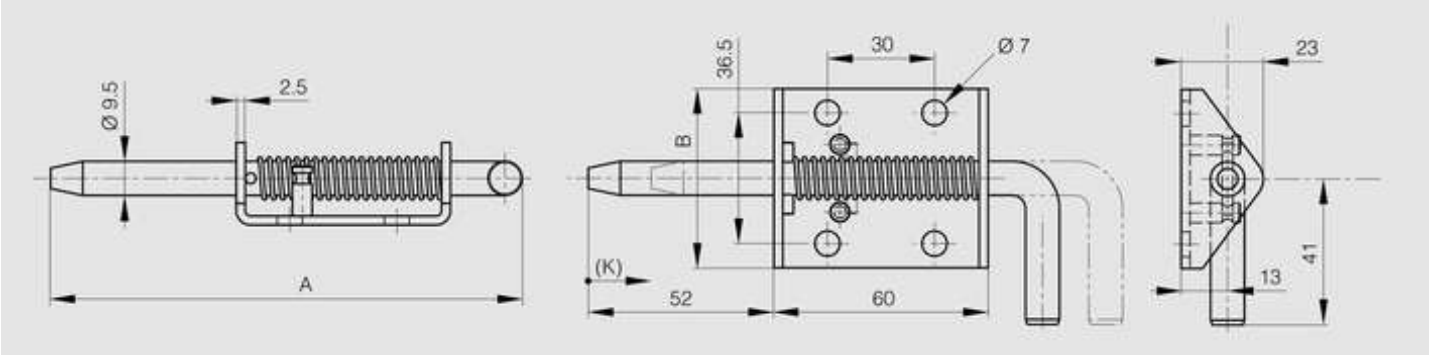

© PINET INDUSTRIE 2014

Material	steel
Finish	zinc plated
A (length)	132
B (width)	50
Weight (g)	175
Opening type	swinging
Locking option	spring loaded
K	17
Material	steel
Latching system	sliding latches

© PINET INDUSTRIE 2014