TS2689

Temperature cable sensor with screw-in sensor

TS-200KLKM06...../US

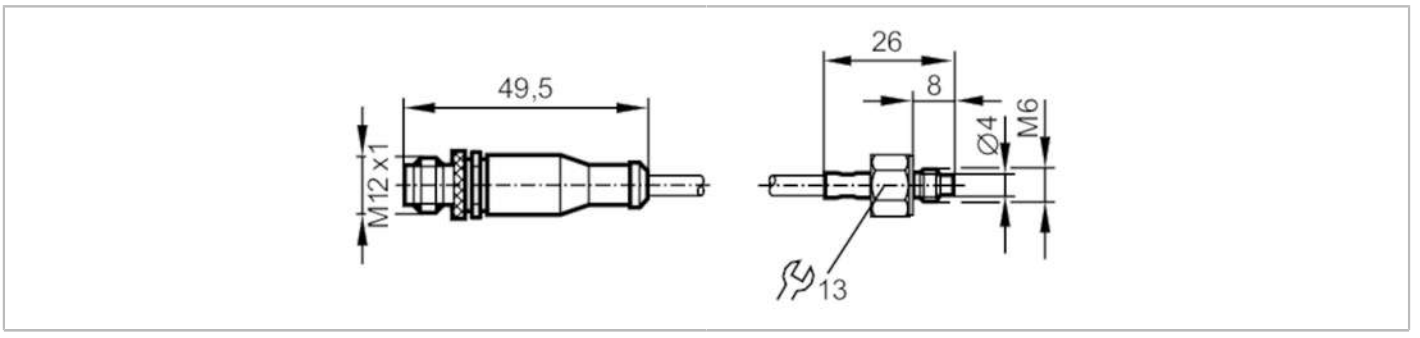

Product characteristics			
Measuring range		-40...90 °C	-40...194 °F
Process connection		threaded connection M6 external thread	
Application			
Measuring element		1 x Pt 100; (to DIN EN 60751, class A)	
Installation		surface mount RTD for solid bodies	
Electrical data			
Protection class		III	
Measuring/setting range			
Measuring range		-40...90 °C	-40...194 °F
Accuracy / deviations			
Accuracy	[K]	± (0,15 K + 0,002 x|t|)	
Response times			
Dynamic response T05 / T09	[s]	3 / 9; (to DIN EN 60751)	
Operating conditions			
Protection		IP 67	
Tests / approvals			
MTTF	[years]	11415.5	
Mechanical data			
Weight	[g]	86.75	
Housing		screw-in sensor	
Dimensions	[mm]	M6 / L = 26	
Thread designation		M6	
Materials		stainless steel (1.4404 / 316L)	
Process connection		threaded connection M6 external thread	
Remarks			
Pack quantity		1 pcs.	

TS2689

Temperature cable sensor with screw-in sensor

TS-200KLKM06...../US

Electrical connection

Cable: 2 m, PUR

Connector: 1 x M12; coding: A



Connection

