CATALOG

Transfer switches

Manual, motorized, automatic and bypass switches

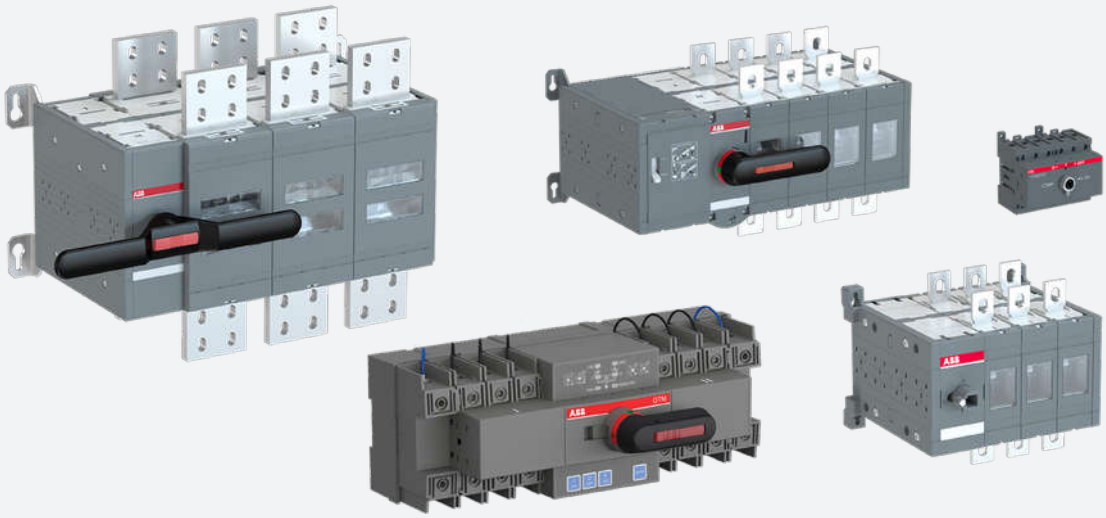

- Easy to install
- Compact design
- Easy to use

To meet any and all of your change-over, bypass and transfer needs, we offer a wide variety of switches ranging from 16 to 3200 Amperes. ABB's range includes switches that allow you to transfer from one source to another manually, remotely or automatically.

Table of contents

01. Description and application examples 04

02. Manual change-over switches 08

03. Motorized change-over switches 46

04. Compact ATS 84

05. Index 98



Transfer, change-over and bypass switches

Securing your power to perform

A secure power supply is essential to any application relying on electricity. We offer a full range of smart, safe and reliable change-over switches for your critical applications.



Comprehensive offering

ABB offers a wide variety of switches to cover all your needs. A complete range from 16 to 3200 Amperes in manual, remote and automatic switches is further enhanced by vast amounts of additional accessories ranging from advanced controllers to auxiliary contacts.



Reliable performance

ABB change-over, bypass and transfer switches are designed, built and tested for the best possible performance. Switches are designed to be virtually maintenance free across their entire extended lifespan and offer reliable performance in any and all possible circumstances. Durability has been ensured by testing switches against the IEC 60947-6-1 standard.



Smart and compact design

All switches by have been designed for easy and cost-efficient installation, maintenance and use. Their modular design and smaller dimensions enable installation into smaller enclosures saving precious space and significantly reducing material, handling and installation costs. The simple design also makes use easy even without previous experience or training.



Safe operations

ABB change-over, bypass and transfer switches come equipped with a comprehensive range of inbuilt safety features such as mechanical interlock. All motorized and automatic switches can also be operated manually in emergency situations, but can also be padlocked when the handle is removed to prevent unwanted manual or remote operations or enable safe maintenance work.



ABB product support

All our switches have been built to the highest standards and are always supported by our dedicated and skilled worldwide service network. If you ever find yourself in need of immediate service or assistance, don't hesitate to get in touch with us. With a product by ABB you are never alone.

Transfer, change-over and bypass switches

Securing your power to perform

A smooth and safe transition from one power source to another is of the utmost importance. In case of power source failure, whether planned or unplanned, a rapid switch to back-up power is often crucial.









To meet any and all of your change-over, bypass and transfer needs, we offer a wide variety of switches ranging from 16 to 3200 Amperes. ABB's range includes switches that allow you to transfer from one source to another manually, remotely or automatically.

ABB Change-over Switches for applications in all walks of life

Back up power for industrial applications
- Power plants
- Data centers
- Production plants
- Farming facilities

Critical lighting and air conditioning for mass transportation hubs
- Airport runways
- Underground railways
- Car parks

Ensured continuity of public services
- Water pumping stations
- Sewage treatment plants
- Telecommunications

Buildings (back up power, lighting, sprinklers, elevators etc.)
- Hospitals
- Shops and malls
- Hotels and restaurants
- Sport stadiums and arenas
- Private residences

01

Ensuring a constant power supply is critical in typical change-over switch applications.

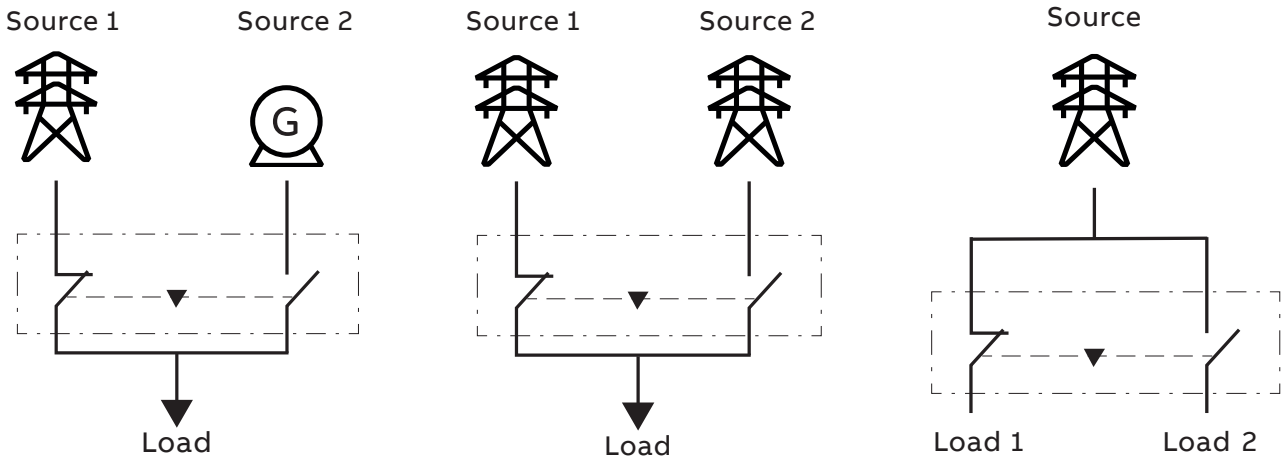

Use in critical applications
The most typical application for change-over switches is utility and stand-by generating set applications where change-over switches commutate between two sources. Often the back-up power source is a stand-by generator set. These generator sets (Gen-sets) are a fundamental part of many Critical Power applications where a constant and reliable source of electrical energy is required.

Ensuring back-up power
Change-over switches are used to switch from the grid to the back-up in case of a failure in the primary energy source. They are typically dedicated switching devices, consisting of two mechanically interlocked switch-disconnectors and a motor operator for electrical operation. The switching device may also have an integrated automatic control unit, enabling fully automatic operations.

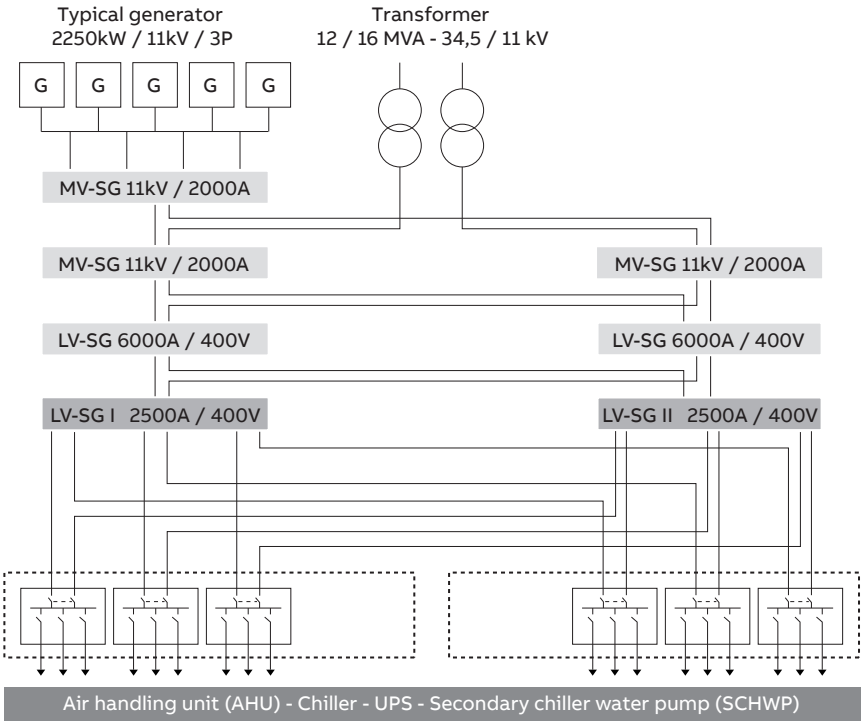

Applications for change-over switches are not always between utility and generating set.
They are also used to provide secondary supply for e.g. air handling units, chillers and water pumps.

02

Manual change-over switches



Manual change-over switches

Open, fast and closed transition from 16 to 3200 Amperes

Introduction to manual change-over switches

General information	10
Product range	11
Type codes and pole configuration table	12

Ordering information

OT16...125_C	14
OT16...OT125F_C	15
OT160...OT800_C, OT200...OT600U_C	16
OT160...OT250_C	17
OT315...OT800_C	18
OT1000...OT3200_C, OT800U_C	19
OT1000...OT3200E_C	20
OT160...OT800_CF	21
OT160...OT400_CL	22
UL/CSA OT30...100_C, OT200...800U_C	23
OT160...800_Y	24

Dimension drawings

Modular change-over switches	25
Manual change-over switches	26
Manual change-over switches for UL/CSA -types	29

Ordering information for accessories

Handle knobs	32
External handles	33
Dimensional drawings for external handles	35
Extended shafts	36
Terminal shrouds	37
Phase barriers	38
Terminal clamps	39
Bridging- and reversing bars	40
Fourth poles for OT16...125F	40

Technical data

Auxiliary contact	41
OT16...125_C	42
OT160...800_C	43
OT1000...3200_C	44
UL/CSA switches OT30...100_C, OT200...800U_C	45

Manual change-over switches

The growing importance of a secure power supply

ABB offers a wide variety of manual change-over switches, from 16 to 3200 Amperes in range. Manual change-over switches are available with three different transition types; Open, fast or closed.

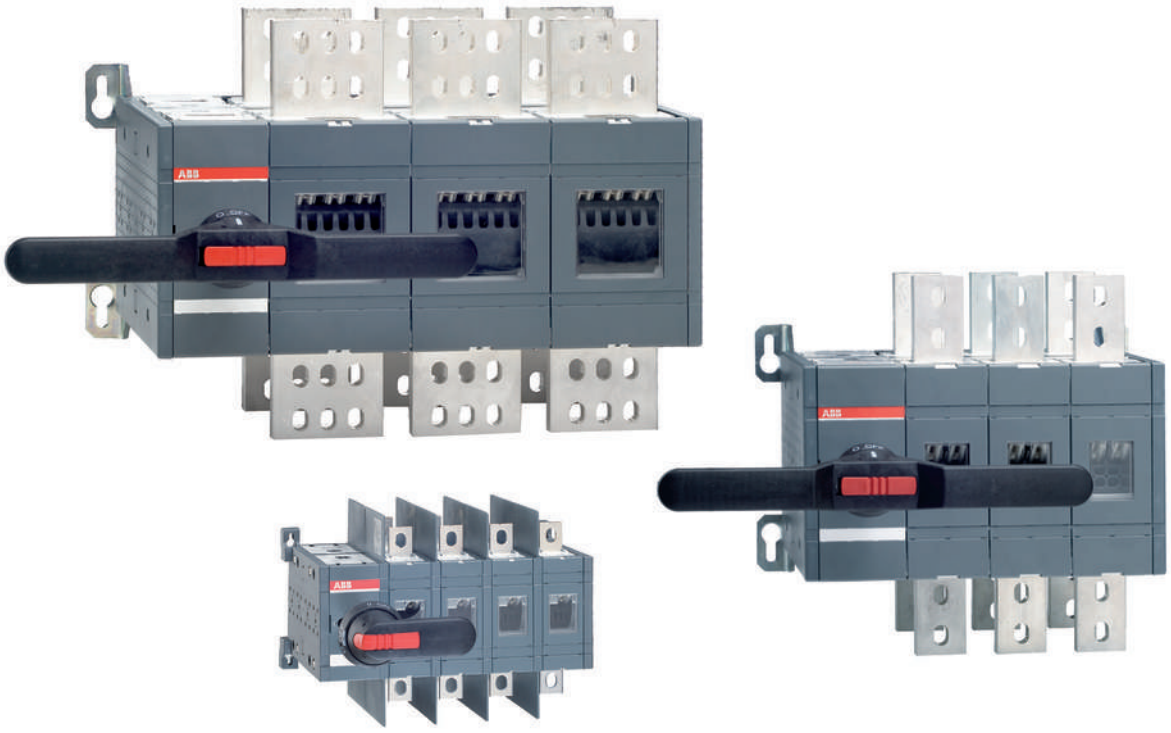

Single terminal per pole construction
A single terminal per pole across the entire range also eliminates the need to use additional fixing sets to do connections and creating savings in terms of energy consumption and space occupied.

Modular and flexible
The modular and flexible construction, which can even include an adjustable periscopic haft,allows for different arrangements of the poles and handle, providing you with the opportunity to create unique space saving solutions for your customers.

UL/CSA certified performance
To complement our wide range of manual change-over switches, we also offer open transition manual change-over switches designed according to UL/CSA certification standards in a power range from 30 to 800 Amperes.

Manual change-over switches

From 16 to 3200 Amperes

Manual operation, change-over switches 16-125A





Types			OT16 _C OT25 _C OT40 _C			OT63 _C OT80 _C		OT100 _C OT125 _C
Ith	25 A	32 A	40 A	63 A		80 A	115 A	125 A
Ie /AC-22A, < 415V	16 A	25 A	40 A	63 A		80 A	100 A	125 A
Ie /AC-23A, < 415V	16 A	20 A	23 A	63 A		75 A	80 A	90 A

Manual operation, change-over switches 160-800A






Types			OT160 _C OT200 _C OT250 _C			OT160_W _C OT200_W _C OT250_W _C	OT315 _C OT400 _C		OT630 _C OT800 _C
Ith	160 A	200 A	250 A	160 A	200 A	250 A	315 A	400 A	630 A	800 A
Ie /AC-22A, < 415V	160 A	200 A	250 A	160 A	200 A	250 A	315 A	400 A	630 A	800 A
Ie /AC-23A, < 415V	160 A	200 A	250 A	160 A	200 A	250 A	315 A	400 A	630 A	800 A
Ie/AC-31B, < 415V	160 A	200 A	250 A	160 A	200 A	250 A	315 A	400 A	630 A	800 A

Manual operation, change-over switches 1000-3200A






Types		OT1000 _C OT1250 _C		OT1600 _C	OT2000 _C OT2500 _C		OT3200 _C
Ith	1000 A	1250 A		1600 A	2000 A	2500 A	3200 A
Ie /AC-22A, < 415V	1000 A	1250 A		1600 A	-	-	-
Ie /AC-23A, < 415V	1000 A	1250 A		1250 A	-	-	-
Ie /AC-21B, < 415V	-	-		-	2000 A	2500 A	3200 A
Ie /AC-31B, < 415V	1000 A	1250 A		1600 A	2000 A	2000 A	

UL/CSA manual change-over switches, 30-800 A









Types	OT30_C	OT60_C	OT100_C	OT200_C	OT400_C	OT600_C	OT800_C
Current, general use	30 A	60 A	100 A	200 A	400 A	600 A	800 A
UL98, 600 V	30 A	60 A	100 A	200 A	400 A	600 A	800 A
Ie /AC-22A, < 415V	40 A	63 A	100 A	250 A	400 A	800 A	800 A

Manual change-over switches

Type codes and pole configuration table

Type codes

Understanding the type code keys below will help you quickly identify the correct product for your needs. The simple naming system allows you to see the products type, Ampere rating, standard classification and number of poles, all in one glance.

Explanation of the types OT16..125_C

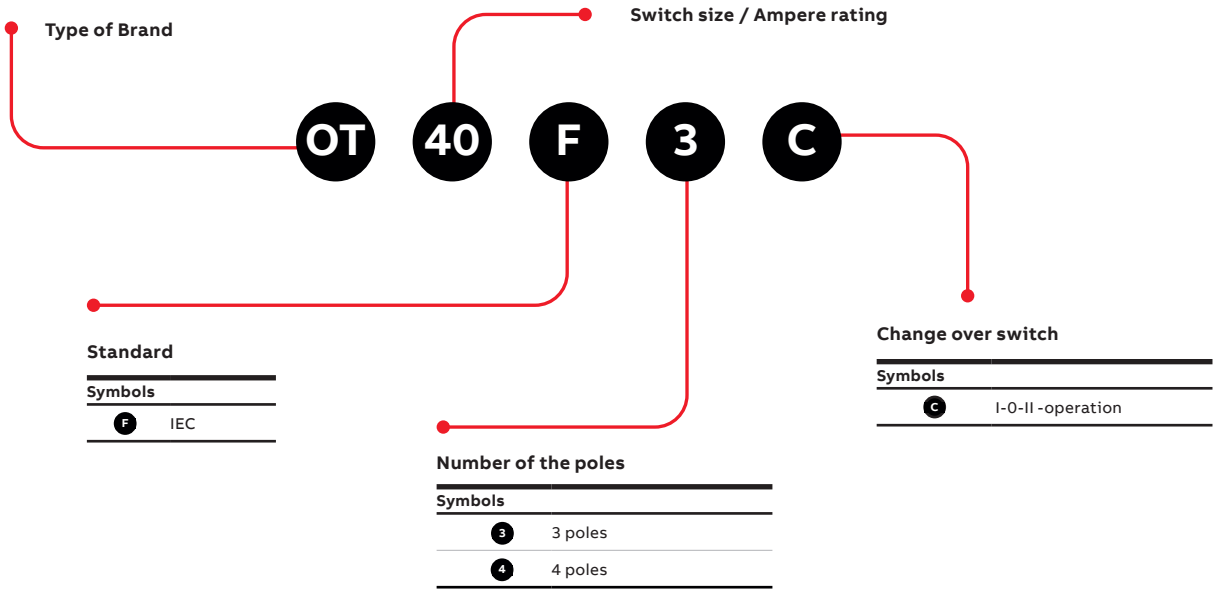

Manual change-over switches

Type codes and pole configuration table

Type codes

Understanding the type code keys below will help you quickly identify the correct product for your needs. The simple naming system allows you to see the products type, Ampere rating, standard classification and number of poles, all in one glance.

Explanation of the types OT160...3200_C

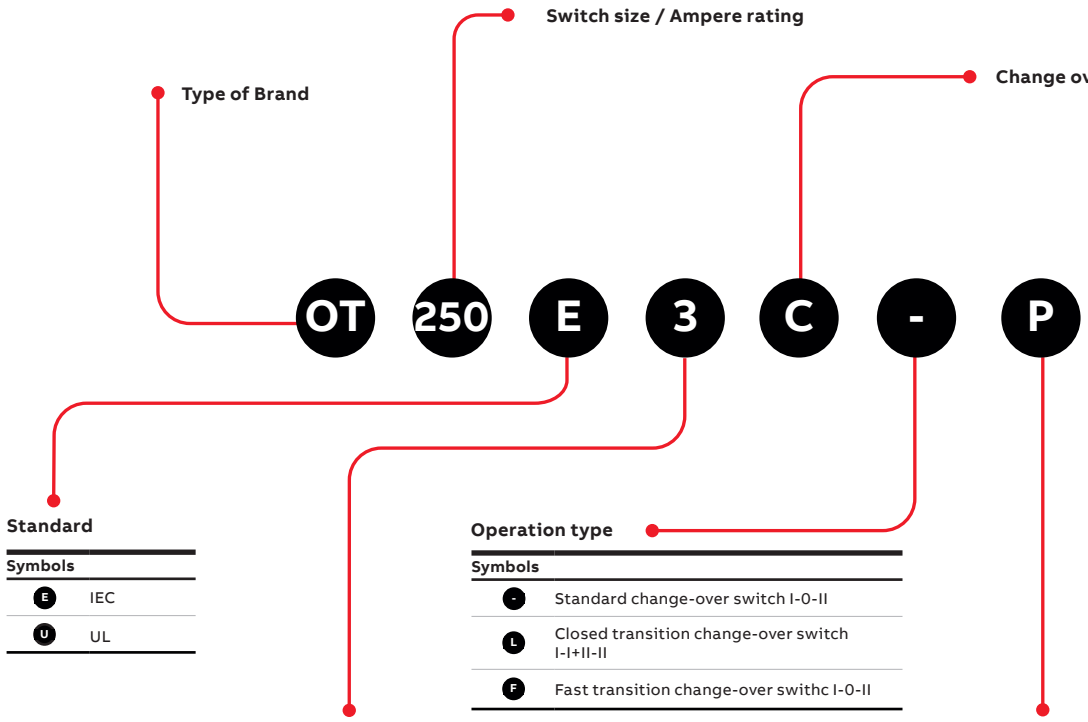

Standard

Symbols	
E	IEC
U	UL

Operation type

Symbols	
-	Standard change-over switch I-0-II
L	Closed transition change-over switch I-I+II-II
F	Fast transition change-over swithc I-0-II

Number of the poles

Symbols	
3	12
4	13
22	33

Included handle

Symbols	
	Handle + shaft not included
P	Pistol handle + shaft
K	Direct mounted handle

Pole configuration table

The various placing options of the operating mechanism in relation to the 3 or 4 poles is illustrated below. The operating mechanism may be placed at the end of the switch or between poles.

For example:	
03	(Without N) 3-poles, operating mechanism at the left end of the switch*
04	(Including N) 4-poles, operating mechanism at the left end of the switch*
12	(Without N) 3-poles, operating mechanism between the poles**
22	(Including N) 4-poles, operating mechanism between the poles**
30	3-poles, operating mechanism at the right end of the switch*
40	4-poles, operating mechanism at the right end of the switch*

*Configuration 03 & 04:

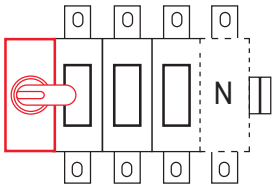

**Configuration 12 & 22:

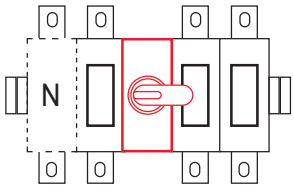

To learn how to install the key accessories, watch the video

Manual transfer switches 160...3200 A – Installation, operation and accessories

*Max 8 aux. contacts on right side of the switch (4 per postion).
** Max. 16 aux contacts on right and left side of the switch (8 per position/side).

Manual change-over switches

Ordering information for OT16...OT125_C

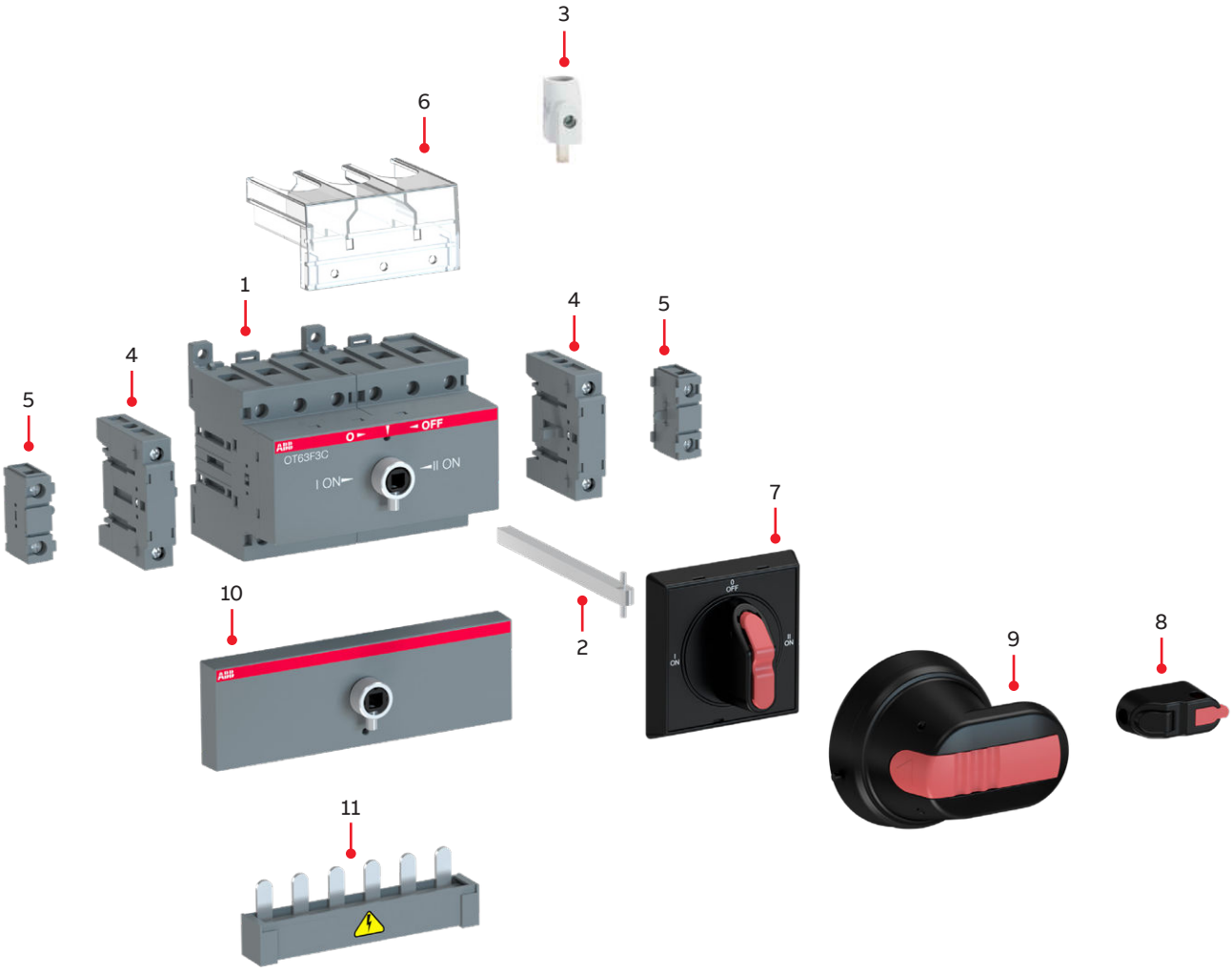

Manual change-over switch accessory guide

1. Manual change-over switch
2. Extended shaft
3. Terminal clamp
4. Fourth pole
5. Auxiliary contact
6. Terminal shroud
7. Selector handle, black or red/yellow
8. Direct handle knob
9. Pistol handle, black or red/yellow
10. Conversion kit
11. Parallel connection kit

Please note that not all listed accessories are automatically included in your order and needs to be ordered separately. See next page for recommendations.

Manual change-over switches

Ordering information for OT16...OT125F_C



OT16...40F3C



OT63...80F3C



OT100...125F3C

Direct operation:



OHBS3



OHBS9

External operation:



OHBS2AJE011



OHB45J6E311



OZXA38



OZXA32

Open transition with stable OFF position
Simple I-O-II –operation where the handle is padlockable in O-position and door interlock available in the I- and II-positions (and when padlocked). Mounting options: Din-rail or base mounting with screws. OT16...40F3C black knob is for position indication purpose only, additional handle must be used for operating the switch.

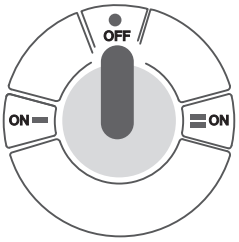

Manual change-over switches, open transition, OT16...OT125F_C
Handle and shaft not included. See recommended accessories.

No. of poles	Rated current and power AC-21A/AC-22A ≤ 415V I A	AC-21A/AC-22A 400V S kVA	AC-23A 400...415V I/P A/kW	Type	Order code	Weight/ unit kg
3	16	11	16/7.5	OT16F3C	1SCA104816R1001	0.25
4	16	11	16/7.5	OT16F4C	1SCA104831R1001	0.31
3	25	17	20/9	OT25F3C	1SCA104863R1001	0.25
4	25	17	20/9	OT25F4C	1SCA104877R1001	0.31
3	40	27	23/11	OT40F3C	1SCA104913R1001	0.25
4	40	27	23/11	OT40F4C	1SCA104934R1001	0.31
3	63	43	63/30	OT63F3C	1SCA105338R1001	0.64
4	63	43	63/30	OT63F4C	1SCA105369R1001	0.70
3	80	55	75/37	OT80F3C	1SCA105402R1001	0.64
4	80	55	75/37	OT80F4C	1SCA105418R1001	0.70
3	100	70	80/37	OT100F3C	1SCA105008R1001	0.90
4	100	70	80/37	OT100F4C	1SCA105019R1001	1.18
3	125	86	90/45	OT125F3C	1SCA105037R1001	0.90
4	125	86	90/45	OT125F4C	1SCA105054R1001	1.18

Cable cross section of the change-over switches

Suitable for switches	Cable cross section mm²
OT16...40F_C	0.75 ... 10
OT63...80F_C	1.5 ... 35
OT100...125F_C	10 ... 70

Recommended accessories: Handles, shafts and parallel connection kit

Suitable for switches	Operating type	Handle type	Order code	Shaft type	Order code
OT16...40F_C	Direct operation	OHBS3	1SCA108320R1001	–	–
OT63...125F_C	Direct operation	OHBS9	1SCA108665R1001	–	–
OT16...125F_C	Selector handle (external)	OHBS2AJE011	1SCA105220R1001	OXS6X120	1SCA101654R1001
OT16...125F_C	Pistol handle (external)	OHB45J6E311	1SCA022817R2130	OXP6X170	1SCA108224R1001

Parallel connection kits
Finger protected connection bars for parallel connection of the upper or lower terminals. The bars accept additional cables, the maximum size is stated below.

Suitable for switches	Cable cross section mm²	Type	Order code	Units/ type pcs	Weight/ unit kg
OT16...40F3C	6 (fine stranded), 10 (stranded)	OZXA33	1SCA022685R0310	1	0.02
OT16...40F4C	6 (fine stranded), 10 (stranded)	OZXA32	1SCA022683R4110	1	0.03
OT63...80F3C	25	OZXA38	1SCA022785R2140	1	0.06
OT63...80F4C	25	OZXA39	1SCA022790R3820	1	0.09
OT100...125F3C	50	OZXA40	1SCA022790R3910	1	0.16
OT100...125F4C	50	OZXA41	1SCA022790R4040	1	0.24

Manual change-over switches

Ordering information for OT160...OT800_C, OT200...OT600U_C

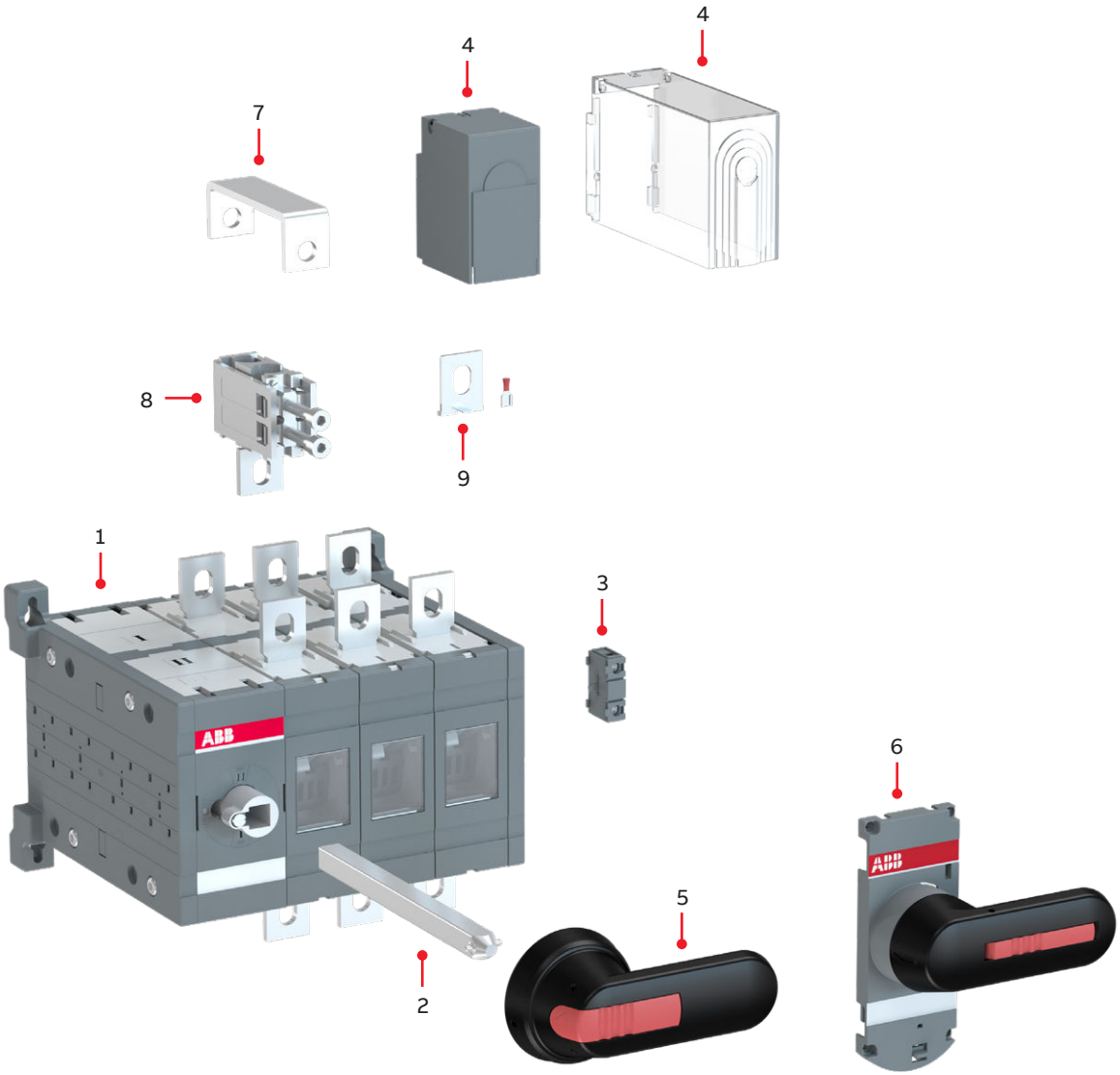

Manual change-over switch accessory guide

1. Manual change-over switch
2. Extended shaft
3. Auxiliary contact1
4. Terminal shroud
5. Pistol handle
6. Direct mount handle*
7. Bridging bar
8. Terminal clamp
9. Voltage sensing connector

To learn how to install the key accessories, watch the video

Manual transfer switches 160...3200 A – Installation, operation and accessories

Please note that not all listed accessories are automatically included in your order.
See next page for recommendations.

[1] Note: Auxiliary contact cannot be installed on the mechanism side.
* Optional handle types available. Please see Accessories for more details.

Manual change-over switches

Ordering information for OT160...OT250_C



OT160...250E03CP



OT160...250E03WCP



OT160...250E04CP



OT160...250E04WCP



OT160...250E33CP



OT160...250E33WCP



OXP6X150_161



OHB65J6E011



OTZC13

Open transition with stable OFF position.
I-O-II –operation where the handle is padlockable in O-position and door interlock available in the I- and II-positions (and when padlocked). Types with _WCP are equipped with non-removable phase barriers.

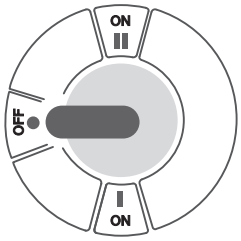

Manual change-over switches, open transition, OT160...OT250_CP
Delivered with a black plastic IP65 I-0-II pistol handle (see the table below), shaft and bolt set for the cable connection. 1000V versions available on request.

No. of poles	Rated current and power AC-21A/AC-22A ≤ 415V I A	400V S kVA	AC-23A 400...415V I/P A/kW	Type	Order code	Weight/ unit kg
Types -W: with wide phase distance.						
3	160	110	160/90	OT160E03CP	1SCA022772R6510	3.3
3	160	110	160/90	OT160E03WCP	1SCA022772R8210	3.6
4	160	110	160/90	OT160E04CP	1SCA022775R9440	4.1
4	160	110	160/90	OT160E04WCP	1SCA022775R0220	4.4
3	200	135	200/110	OT200E03CP	1SCA022771R7520	3.3
3	200	135	200/110	OT200E03WCP	1SCA022772R8720	3.6
4	200	135	200/110	OT200E04CP	1SCA022771R7280	4.1
4	200	135	200/110	OT200E04WCP	1SCA022775R0650	4.4
3	250	170	250/140	OT250E03CP	1SCA022771R3450	3.3
3	250	170	250/140	OT250E03WCP	1SCA022772R8300	3.6
4	250	170	250/140	OT250E04CP	1SCA022775R4640	4.1
4	250	170	250/140	OT250E04WCP	1SCA022775R0810	4.4
4	250	170	250/140	OT250E13CP	1SCA022777R0330	4.1
6	250	170	250/140	OT250E33CP	1SCA118551R1001	5.7
6	250	170	250/140	OT250E33WCP	1SCA118608R1001	6.0

Shafts, handle and bolt kits included as standard

Suitable for switches	Shaft	Handle	Bolt kit
OT160...250_C	OXP6x161	OHB65J6E011	M8x25

Recommended accessories: Bridging bars
Bridging bars are an easy and cost-efficient way to make load side connections and are field installable both sides of the switch (top or bottom).

Suitable for switches	No. of poles	Type	Order code	Units / type pcs	Weight / unit kg
OT160...250_C	3	OTZC13	1SCA022767R6910	3	0.5
OT160...250_C	4	OTZC14	1SCA022767R7040	4	0.8

Manual change-over switches

Ordering information for OT315...OT800_C



OT315...400E03CP



OT315...400E13CP



OT315...400E33CP



OT630...800E03CP



OT630...800E04CP



OT630...800E33CP



OXP12X185



OHB125J12E011



OTZC23

Open transition with stable OFF position
I-O-II –operation where the handle is padlockable in O-position and door interlock available in the I- and II-positions (and when padlocked).

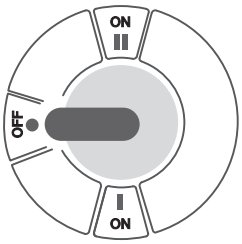

Manual change-over switches, open transition, OT315...OT800_CP
Delivered with a black plastic IP65 I-0-II pistol handle (see the table below), shaft and bolt set for the cable connection.

No. of poles	Rated current and power AC-21A/AC-22A ≤ 415V I A	400V S kVA	AC-23A 400...415V I/P A/kW	Type	Order code	Weight/ unit kg
Place of mechanism, see the pictures.						
3	315	215	315/160	OT315E03CP	1SCA022772R6780	5.9
3	315	215	315/160	OT315E12CP	1SCA022776R9910	5.9
4	315	215	315/160	OT315E04CP	1SCA022775R7150	7.1
4	315	215	315/160	OT315E13CP	1SCA022777R0410	7.1
6	315	215	315/160	OT315E33CP	1SCA118635R1001	9.5
3	400	275	400/220	OT400E03CP	1SCA022771R8500	5.9
3	400	275	400/220	OT400E12CP	1SCA022776R9590	5.9
4	400	275	400/220	OT400E04CP	1SCA022771R8680	7.1
4	400	275	400/220	OT400E13CP	1SCA022777R0500	7.1
6	400	275	400/220	OT400E33CP	1SCA118629R1001	9.5
3	630	435	630/355	OT630E03CP	1SCA022785R6050	17.7
3	630	435	630/355	OT630E12CP	1SCA022785R8690	17.7
4	630	435	630/355	OT630E04CP	1SCA022785R6130	21
4	630	435	630/355	OT630E13CP	1SCA022785R9070	21
6	630	435	630/355	OT630E33CP	1SCA118652R1001	27.6
3	800	550	800/450	OT800E03CP	1SCA022785R6300	17.7
3	800	550	800/450	OT800E12CP	1SCA022785R8850	17.7
4	800	550	800/450	OT800E04CP	1SCA022785R6210	21
4	800	550	800/450	OT800E13CP	1SCA022785R9230	21
6	800	550	800/450	OT800E33CP	1SCA118649R1001	27.6

Shafts, handle and bolt kits included as standard

Suitable for switches	Shaft	Handle	Bolt kit
OT315...400_C	OXP12x166	OHB95J12E011	M10x30
OT630...800_C	OXP12x185	OHB125J12E011	M12x40

Recommended accessories: Bridging bars
Bridging bars are an easy and cost-efficient way to make load side connections and are field installable both sides of the switch (top or bottom).

Suitable for switches	No. of poles	Type	Order code	Units / type pcs	Weight / unit kg
OT315...400_C	3	OTZC23	1SCA022767R7120	3	0.6
OT315...400_C	4	OTZC24	1SCA022767R7210	4	0.8
OT630...800_C	3	OTZC33	1SCA022785R7020	3	1
OT630...800_C	4	OTZC34	1SCA022785R7110	4	1.3

Manual change-over switches

Ordering information for OT1000...OT3200_C, OT800U_C

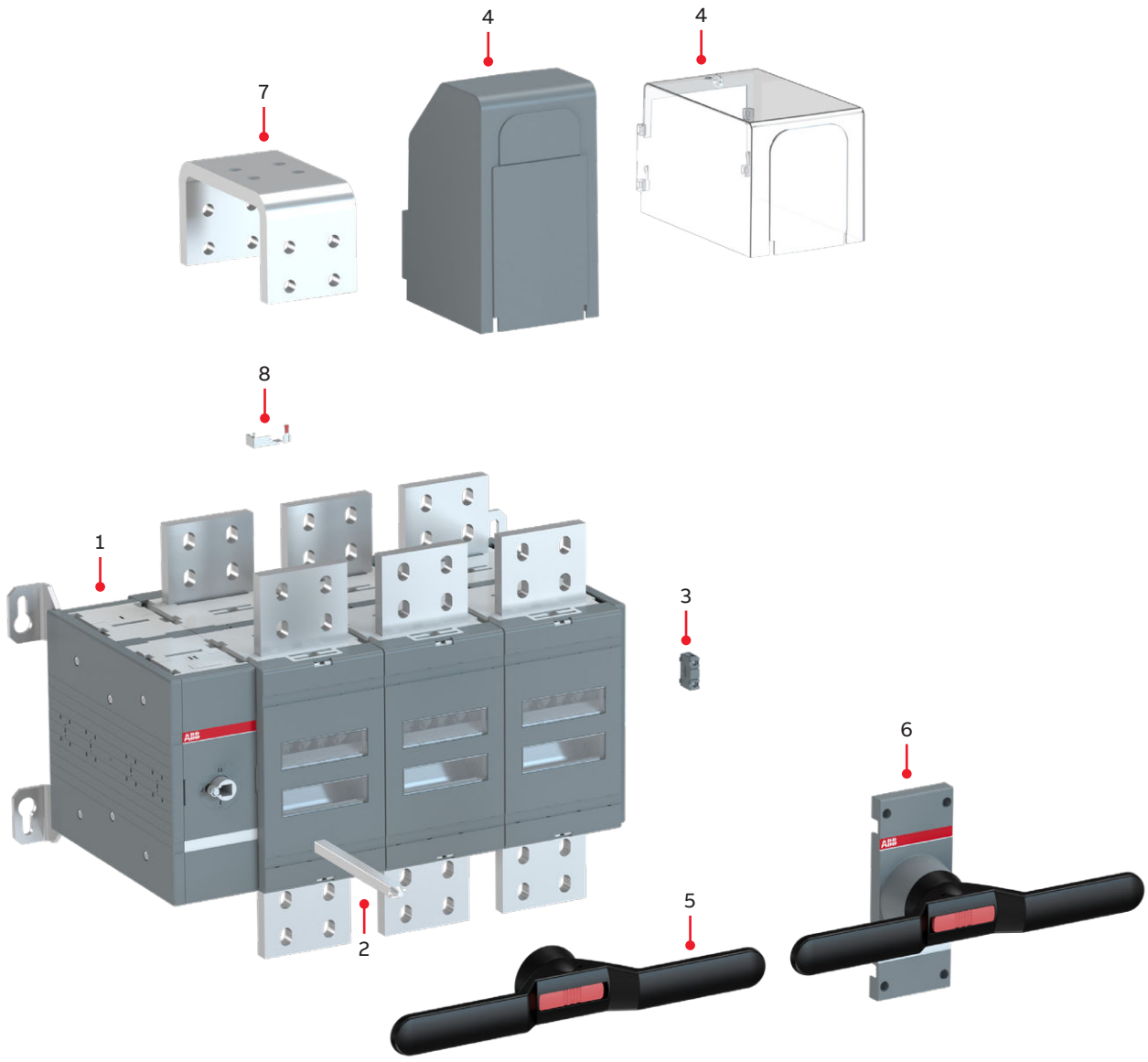

Manual change-over switch accessory guide

1. Manual change-over switch
2. Extended shaft
3. Auxiliary contact1
4. Terminal shroud
5. Pistol handle
6. Direct mount handle*
7. Bridging bar
8. Voltage sensing connector

To learn how to install the key accessories, watch the video

Manual transfer switches 160...3200 A – Installation, operation and accessories

Please note that not all listed accessories are automatically included in your order.
See next page for recommendations.

¹ Note: Auxiliary contact cannot be installed on the mechanism side.
* Optional handle types available. Please see Accessories for more details.

Manual change-over switches

Ordering information for OT1000...OT3200E_C



OT1250E03CP



OT1000...1250E22CP



OT1600E03CP

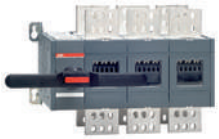

OT2000...2500E03CP



OT3200E03CP



OXP12X185



OHB200J12PE011



OTZC44

Open transition with stable OFF position.
I-O-II –operation where the handle is padlockable in O-position and door interlock available in the I- and II-positions (and when padlocked).

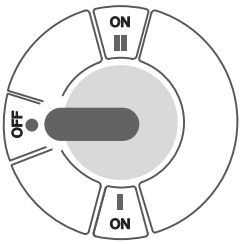

Manual change-over switches, open transition, OT1000...OT3200_C
Delivered with a black plastic IP65 I-0-II pistol handle (see the table below), shaft and bolt set for the cable connection.

No. of poles	Rated current [1] and power AC-21A/AC-22A ≤ 415V I A	400V S kVA	AC-23A 400...415V I/P A/kW	Type	Order code	Weight / unit kg
Place of mechanism, see the pictures.						
3	1000	680	1000/560	OT1000E03CP	1SCA022872R1680	48
4	1000	680	1000/560	OT1000E04CP	1SCA022872R1500	60
4	1000	680	1000/560	OT1000E22CP	1SCA103289R1001	60
3	1250	850	1250/710	OT1250E03CP	1SCA022872R0790	48
4	1250	850	1250/710	OT1250E04CP	1SCA022872R1250	60
4	1250	850	1250/710	OT1250E22CP	1SCA103311R1001	60
3	1600	1000	1250/710	OT1600E03CP	1SCA022872R1840	51
4	1600	1000	1250/710	OT1600E04CP	1SCA022872R2310	63
4	1600	1000	1250/710	OT1600E22CP	1SCA103303R1001	63
3	2000	1350	-	OT2000E03CP	1SCA103908R1001	70
4	2000	1350	-	OT2000E04CP	1SCA103912R1001	86
4	2000	1350	-	OT2000E22CP	1SCA103953R1001	86
3	2500	1700	-	OT2500E03CP	1SCA105615R1001	70
4	2500	1700	-	OT2500E04CP	1SCA103906R1001	86
4	2500	1700	-	OT2500E22CP	1SCA103902R1001	86
3	3200	2170	-	OT3200E03CP	1SCA129156R1001	79
4	3200	2170	-	OT3200E04CP	1SCA129158R1001	97
4	3200	2170	-	OT3200E22CP	1SCA131131R1001	97

[1] OT2000...3200: Category AC-21B
1000V versions available on request

Shafts, handle and bolt kits included as standard

Suitable for switches	Shaft	Handle	Bolt kit
OT1000...2500_C	OXP12x185	OHB200J12PE011	M12x60
OT3200_C	OXP12x185	OHB200J12PE011	M12x100

Recommended accessories: Bridging bars
Bridging bars are an easy and cost-efficient way to make load side connections and are field installable both sides of the switch (top or bottom).

Suitable for switches	No. of poles	Type	Order code	Units / type pcs	Weight / unit kg
OT1000...1250_C	4	OTZC44	1SCA022868R0800	4	5.6
OT1600_C	4	OTZC54	1SCA022868R1010	4	7.4
OT2000...2500_C	4	OTZC64	1SCA022868R1360	4	14.4
OT_3200E_C	4	OTZC74	1SCA128844R1001	4	18.7

Manual change-over switches

Ordering information for OT160...OT800_CF



OT160...250E03CFP



OT160...250E03WCFP



OT315...400E13CFP



OT630...800E03CFP



OXP12X185



OHB65J6E69



OHB95J12E69

Fast transition

Faster I-O-II –operation with no padlocking opportunity or interlocking. 90° operating angle for fast switching and minimized OFF-time between transfer from I-II or II-I (as low as 20ms).

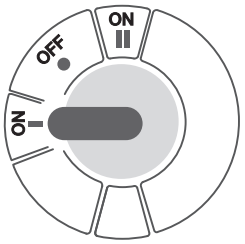

Manual change-over switches, fast transition, OT160...OT800_CF

Delivered with a black plastic IP65 I-0-II pistol handle (see the table below), shaft and bolt set for the cable connection. Handle padlocking and door interlocking functions are not designed for this product type.

No. of poles	Rated current and power AC-21A/AC-22A ≤ 415V I A	400V S kVA	AC-23A 400...415V I/P A/kW	Type	Order code	Weight/ unit kg
Place of mechanism, see the pictures. Types -W: with wide phase distance.						
3	160	110	160/90	OT160E03CFP	1SCA106086R1001	3.3
3	160	110	160/90	OT160E03WCFP	1SCA108484R1001	3.6
4	160	110	160/90	OT160E04CFP	1SCA108489R1001	4.1
4	160	110	160/90	OT160E04WCFP	1SCA108492R1001	4.4
3	200	135	200/110	OT200E03CFP	1SCA108520R1001	3.3
3	200	135	200/110	OT200E03WCFP	1SCA107578R1001	3.6
4	200	135	200/110	OT200E04CFP	1SCA108528R1001	4.1
4	200	135	200/110	OT200E04WCFP	1SCA108531R1001	4.4
3	250	170	250/140	OT250E03CFP	1SCA108591R1001	3.3
3	250	170	250/140	OT250E03WCFP	1SCA107577R1001	3.6
4	250	170	250/140	OT250E04CFP	1SCA108600R1001	4.1
4	250	170	250/140	OT250E04WCFP	1SCA108606R1001	4.4
3	315	215	315/160	OT315E03CFP	1SCA108629R1001	5.9
4	315	215	315/160	OT315E04CFP	1SCA114535R1001	7.1
3	400	275	400/220	OT400E03CFP	1SCA106360R1001	5.9
4	400	275	400/220	OT400E04CFP	1SCA108650R1001	7.1
3	630	435	630/355	OT630E03CFP	1SCA106915R1001	17.7
4	630	435	630/355	OT630E04CFP	1SCA108753R1001	21
3	800	550	800/450	OT800E03CFP	1SCA106916R1001	17.7
4	800	550	800/450	OT800E04CFP	1SCA106945R1001	21

Shafts, handle and bolt kits included as standard

Suitable for switches	Shaft	Handle	Bolt kit
OT160...250_CF	OXP6x161	OHB65J6E69	M8x25
OT315...400_CF	OXP12x166	OHB95J12E69	M10x30
OT630...800_CF	OXP12x185	OHB145J12E69	M12x40

Manual change-over switches

Ordering information for OT160...OT400_CL



OT160...250E03CLP



OT160...250E03WCLP



OT315...400E03CLP

Closed transition

I – I+II – II –operation, or closed transition, means that there is no OFF-position. There is a I+II –position between I and II, in which both switches are closed simultaneously.

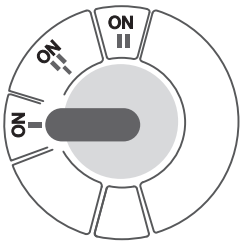

Manual change-over switches, closed transition, OT160...OT400_CL

Delivered with a black plastic IP65 I - I+II - II pistol handle (see the table below), shaft and bolt set for the cable connection. Handle padlocking and door interlocking functions are not designed for this product type.

No. of poles	Rated current and power AC-21A/AC-22A ≤ 415V I A	400V S kVA	AC-23A 400...415V I/P A/kW	Type	Order code	Weight/ unit kg
Place of mechanism, see the picture. Types -W: with wide phase distance.						
3	160	110	160/90	OT160E03CLP	1SCA108468R1001	3.3
3	160	110	160/90	OT160E03WCLP	1SCA108486R1001	3.6
4	160	110	160/90	OT160E04CLP	1SCA108491R1001	4.1
4	160	110	160/90	OT160E04WCLP	1SCA108494R1001	4.4
3	200	135	200/110	OT200E03CLP	1SCA108522R1001	3.3
3	200	135	200/110	OT200E03WCLP	1SCA108525R1001	3.6
4	200	135	200/110	OT200E04CLP	1SCA108530R1001	4.1
4	200	135	200/110	OT200E04WCLP	1SCA108532R1001	4.4
3	250	170	250/140	OT250E03CLP	1SCA108593R1001	3.3
3	250	170	250/140	OT250E03WCLP	1SCA107576R1001	3.6
4	250	170	250/140	OT250E04CLP	1SCA108605R1001	4.1
4	250	170	250/140	OT250E04WCLP	1SCA108607R1001	4.4
3	315	215	315/160	OT315E03CLP	1SCA108630R1001	5.9
4	315	215	315/160	OT315E04CLP	1SCA106404R1001	7.1
3	400	275	400/220	OT400E03CLP	1SCA108641R1001	5.9
4	400	275	400/220	OT400E04CLP	1SCA106405R1001	7.1



OXP12X185



OHB65J6E65



OHB95J12E65

Shafts, handle and bolt kits included as standard

Suitable for switches	Shaft	Handle	Bolt kit
OT160...250_CL	OXP6x161	OHB65J6E65	M8x25
OT315...400_CL	OXP12x166	OHB95J12E65	M10x30

Manual change-over switches

Ordering information for UL/CSA OT30…100_C, OT200…800U_C



OT100...125F3C



OT200U03CP



OT400U04CP



OT600U03CP



OT800U03CP

Open transition
Double-throw switch for use in optional standby system. Simple I-O-II –operation where the handle is padlockable in O-position and door interlock available in the I- and II-positions (and when padlocked).

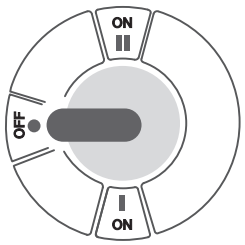

UL/CSA manual change-over switches, open transition, OT30...100_C, OT200...800_C
The change-over switches are delivered with a black handle IP65, Nema type 1, 3R, 12, a shaft and a bolt set for the cable connection and a set of phase separators.

No. of poles	UL98 600V general use	Rated current IEC60947-3 ≤ 415 V AC-21-22A	Rated current IEC60947-6-1 ≤ 415V AC-31B/ AC-33B	Type	Order code	Units/ type	Weight/ unit
	A	A	A			pcs	kg
3	30	40/40		OT30F3C	1SCA105071R1001	1	0.9
4	30	40/40		OT30F4C	1SCA146051R1001	1	1.18
3	60	63/63		OT60F3C	1SCA105078R1001	1	0.9
4	60	63/63		OT60F4C	1SCA146053R1001	1	1.18
3	100	100/80		OT100F3C	1SCA105008R1001	1	0.9
4	100	100/80		OT100F4C	1SCA105019R1001	1	1.2
3	200	250	250/250	OT200U03CP	1SCA022771R5910	1	3.6
4	200	250	250/250	OT200U04CP	1SCA022771R6210	1	4.4
3	400	400	400/400	OT400U03CP	1SCA022771R2810	1	6.2
4	400	400	400/400	OT400U04CP	1SCA022771R2300	1	8.1
3	600	800	800/800	OT600U03CP	1SCA022785R5320	1	17.9
4	600	800	800/800	OT600U04CP	1SCA022785R5410	1	21
3	800	800	1600/1000	OT800U03CP	1SCA104031R1001	1	51
4	800	800	1600/1000	OT800U04CP	1SCA104036R1001	1	63

Shafts, handle and bolt kits included as standard
The handles are equipped with door interlock function in both I- and II-position and when padlocked. Padlocking possibility in O-position with 3 padlocks, bail dia Ø 5...10 mm. Indication I-O-II. Nema type 1, 3R, 12.

OT30...125F_ handle and shaft must be ordered separately.

Suitable for switches	Shaft	Handle	Bolt kit
OT200U_	OXP6x161	OHB65J6E011	M8x25
OT400U_	OXP12x166	OHB95J12E011	M10x30
OT600U_	OXP12x185	OHB125J12E011	M12x40
OT800U_	OXP12X185	OHB200J12PE011	M12x60

Manual bypass switches

Ordering information for manual OT160…800_Y



OT160...250E03_YP



OT315...400E03_YP



OT630...800E03_YP

Manual bypass switches, OT160...800_Y
Delivered with a black plastic IP65 I-0-II pistol handle and a handle extension for enabling smooth manual operation, shaft and bolt set for the cable connection. The handle extension is snap-onmounted on the standard handle for manual operation. The handle extension shall be removed when padlocking the standard handle. Handle padlockable in the 0-position, door interlock in the I- and II-positions and when padlocked.

Open transition

No. of poles	Rated current and power AC-21A/AC-22A ≤ 415V I	400V S	AC-23A 400...415V I/P	Type	Order code	Weight/ unit
	A	kVA	kW			kg
3	160	110	160/90	OT160E03YP	1SCA123551R1001	5.6
4	160	110	160/90	OT160E04YP	1SCA123556R1001	7.5
3	200	135	200/110	OT200E03YP	1SCA123552R1001	5.6
4	200	135	200/110	OT200E04YP	1SCA123557R1001	7.5
3	250	170	250/140	OT250E03YP	1SCA123553R1001	5.6
4	250	170	250/140	OT250E04YP	1SCA123558R1001	7.5
3	400	275	400/220	OT400E03YP	1SCA123582R1001	10.1
4	400	275	400/220	OT400E04YP	1SCA124026R1001	13.5
3	630	435	630/355	OT630E03YP	1SCA123590R1001	-
4	630	435	630/355	OT630E04YP	1SCA123592R1001	-
3	800	550	800/450	OT800E03YP	1SCA123591R1001	-
4	800	550	800/450	OT800E04YP	1SCA123593R1001	-

Closed transition

No. of poles	Rated current and power AC-21A/AC-22A ≤ 415V I	400V S	AC-23A 400...415V I/P	Type	Order code	Weight/ unit
	A	kVA	kW			kg
3	160	110	160/90	OT160E03YLP	1SCA145895R1001	5.6
4	160	110	160/90	OT160E04YLP	1SCA145907R1001	7.5
3	200	135	200/110	OT200E03YLP	1SCA145896R1001	5.6
4	200	135	200/110	OT200E04YLP	1SCA145908R1001	7.5
3	250	170	250/140	OT250E03YLP	1SCA145897R1001	5.6
4	250	170	250/140	OT250E04YLP	1SCA145909R1001	7.5
3	400	275	400/220	OT400E03YLP	1SCA145932R1001	10.1
4	400	275	400/220	OT400E04YLP	1SCA145938R1001	13.5

Functionality in brief for open transition type
This simplified diagram illustrates the basic functionality and application of these switch products.

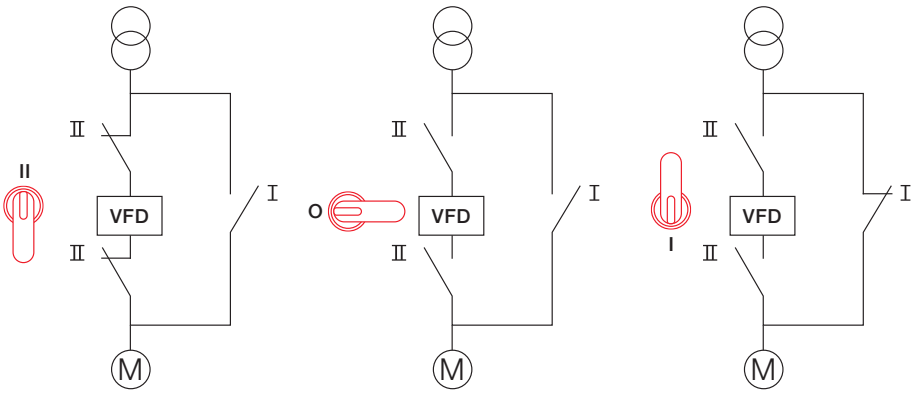

Modular change-over switches

Dimensional drawings

OT16...40F_C

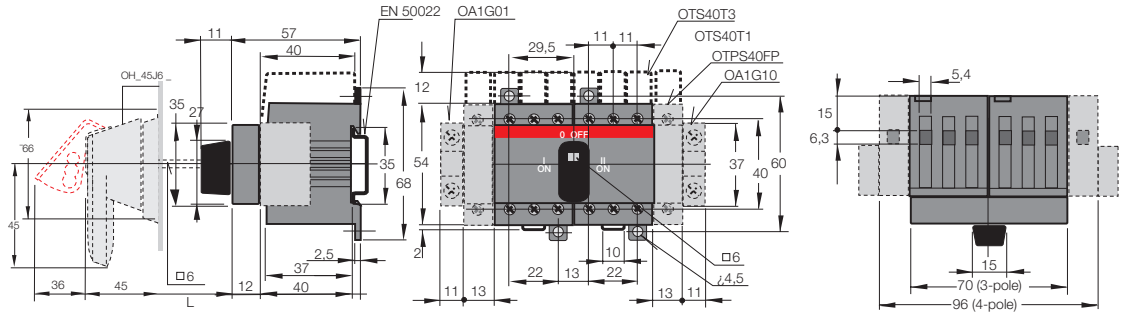

OT63...80F_C

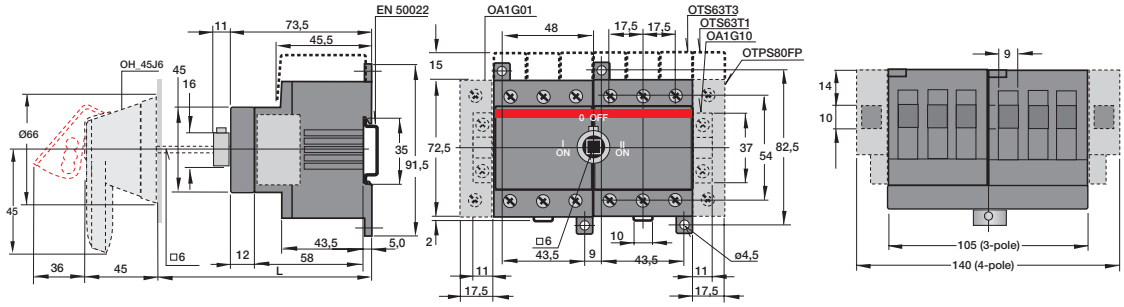

OT100...125F_C

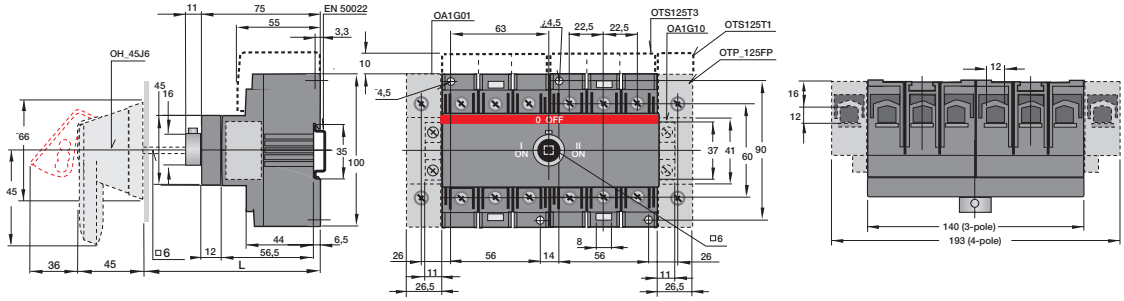

OT16...40F_C

Selector handle OH_S2AJE011

Shaft OXS6X_	Installation depth mm
85	103...114
105	123...134
120	138...149
130	148...159

Pistol handle OH_45J6E311

Shaft OXS6X_	Installation depth mm
170	184...195
265	279...290
400	414...425

OT63...80F_C

Selector handle OH_S2AJE011

Shaft OXS6X_	Installation depth mm
105	141...151
120	156...166
130	166...176

Pistol handle OH_45J6E311

Shaft OXS6X_	Installation depth mm
170	203...214
265	298...309
400	433...444

OT16...40F_C

Selector handle OH_S2AJE011

Shaft OXS6X_	Installation depth mm
105	140...150
120	155...165
130	165...175

Pistol handle OH_45J6E311

Shaft OXS6X_	Installation depth mm
170	212...226
265	307...321
400	442...456

Main dimensions (mm)

Manual change-over switches
Dimensional drawings

OT160...OT250E03/04C_P

OT160-250_C_

	E03	E04	E12	E13	E22	E23	E33
	mm	mm	mm	mm	mm	mm	mm
A1	116	116	116	116	116	116	116
A2	155	190	155	190	190	225	260
B	170	205	170	205	205	240	275

C000001 / OT160-250E02-04_C_ C /ES

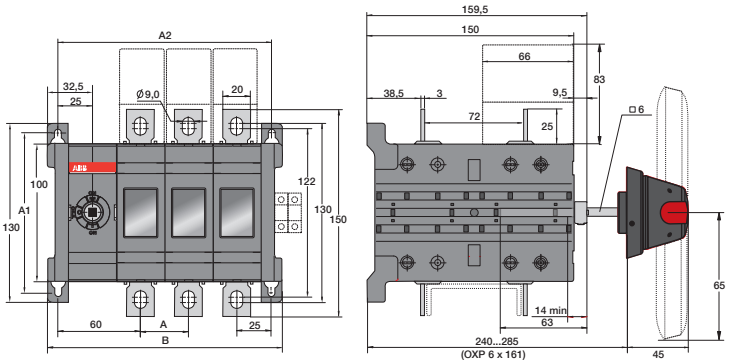

OT160...OT250E03/04WC_P

OT160-250_WC

	E03	E04
	mm	mm
A	43	43
A1	116	116
A2	179	222
B	194	237

C000010 / OT160-250E_WC_ C /ES

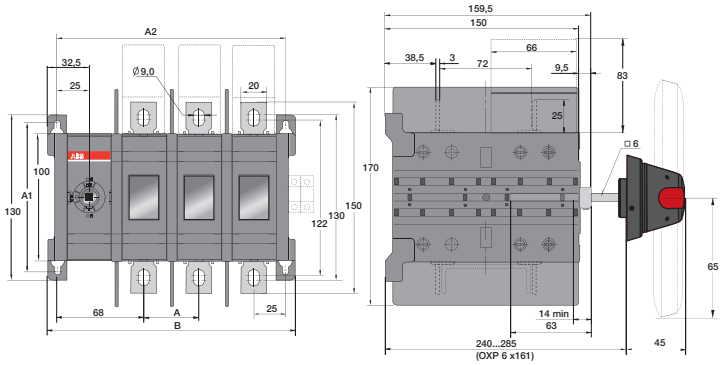

OT315...400E03/04C_P

OT315-400_C

	E03	E04	E12	E13	E22	E23	E33
	mm	mm	mm	mm	mm	mm	mm
A	44	44	44	44	44	44	44
A1	142	142	142	142	142	142	142
A2	202.5	246.5	202.5	246.5	246.5	290.5	334.5
B	221	265	221	265	265	309	353

C000008 / 315-400E02-04_C_ C /ES

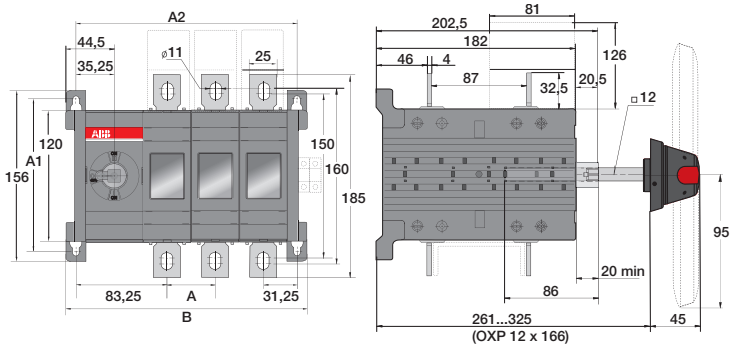

Manual change-over switches

Dimensional drawings

OT630...800E03/04C_P

OT630-800_C_

	E03	E04	E12	E13	E22	E23	E33
	mm	mm	mm	mm	mm	mm	mm
A	65	65	65	65	65	65	65
A1	180	180	180	180	180	180	180
A2	290	355	290	355	355	420	485
B	311	376	311	376	376	441	506

M00088/OT630-800E02-04C_ C /ES

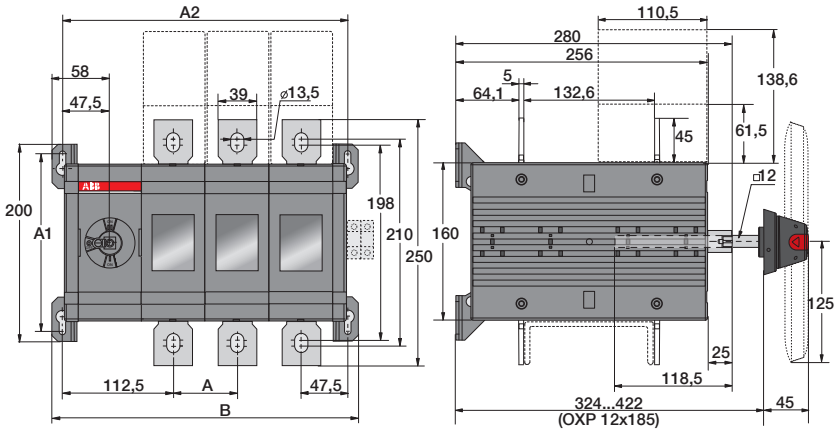

OT1000...1600E03/04CP

OT1000-1600_C_

	E03	E04	E12	E13	E22
	mm	mm	mm	mm	mm
A1	230	230	230	230	230
A2	370	450	370	450	450
B	400	480	400	480	480

M00155/OT1000-1600E_C-1 E /ES

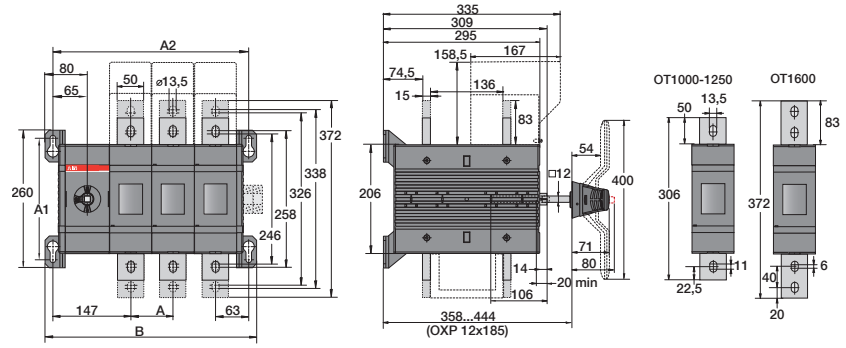

OT2000...2500E03/04CP

OT2000-2500_C_

	E03	E04	E12	E13	E22
	mm	mm	mm	mm	mm
A	126	126	126	126	126
A1	230	230	230	230	230
A2	508	634	508	634	634
B	538	664	538	664	664

M00179/ OT2000-2500E_C_ D /ES

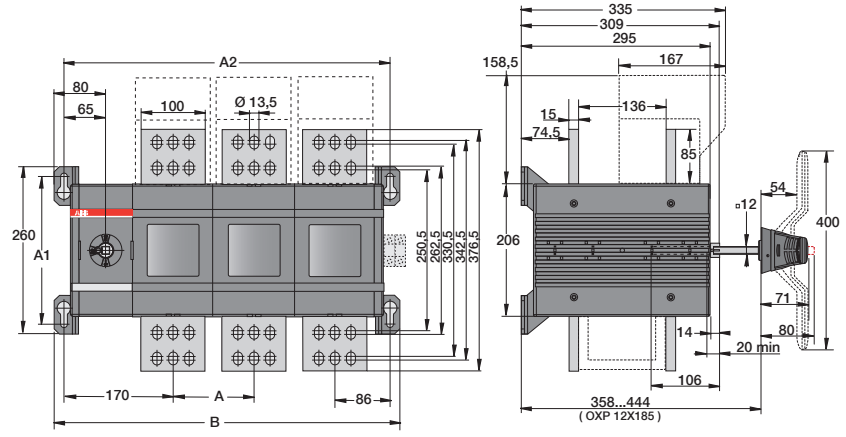

Main dimensions (mm)

Manual change-over switches

Dimensional drawings

OT3200E02/03/04C_P

OT3200_C

	E03	E04
	mm	mm
A	560	700
B	590	730

M00435/
OT3200E02-04C B

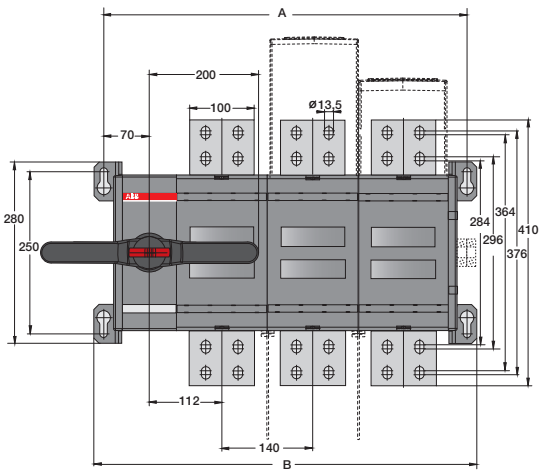

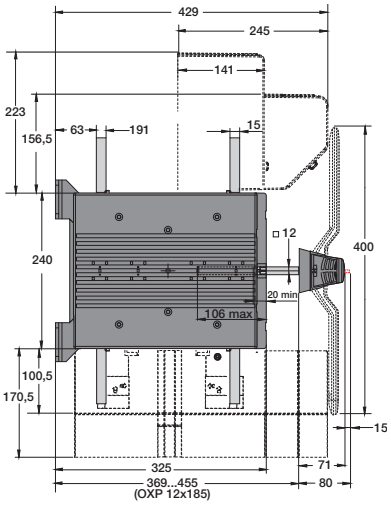

Main dimensions (mm)

Manual change-over switches

Dimensional drawings for UL/CSA -types

OT30...100_C

Selector handle OH_S2AJE011

Shaft OXS6X_	Installation depth mm
105	140...150
120	155...165
130	165...175

Pistol handle OH_45J6E311

Shaft OXS6X_	Installation depth mm
150	192...206
170	212...226
265	307...321
400	442...456

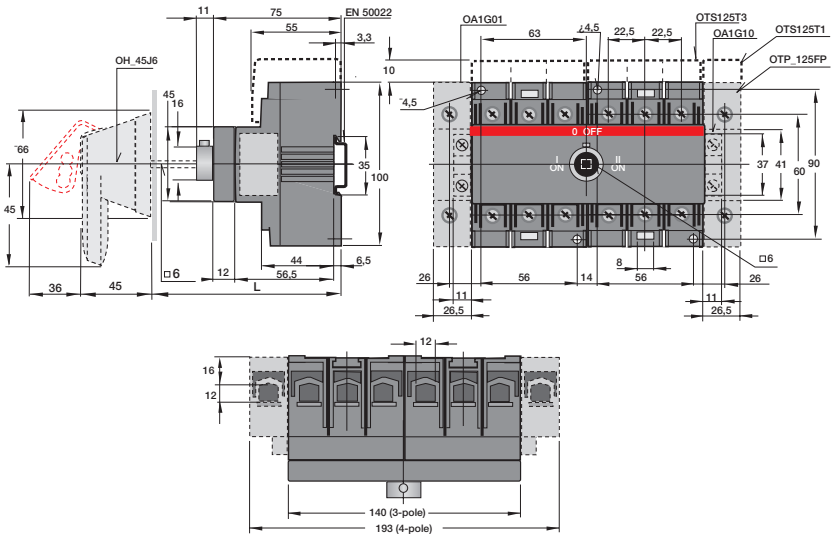

OT200U03/04CP

OT200_C_

	U03 mm/in	U04 mm/in
A1	116/4.57	116/4.57
A2	179/7.05	222/8.74
B	194/7.64	237/9.33

C000002 / OT200U02_04_C _ C /ES

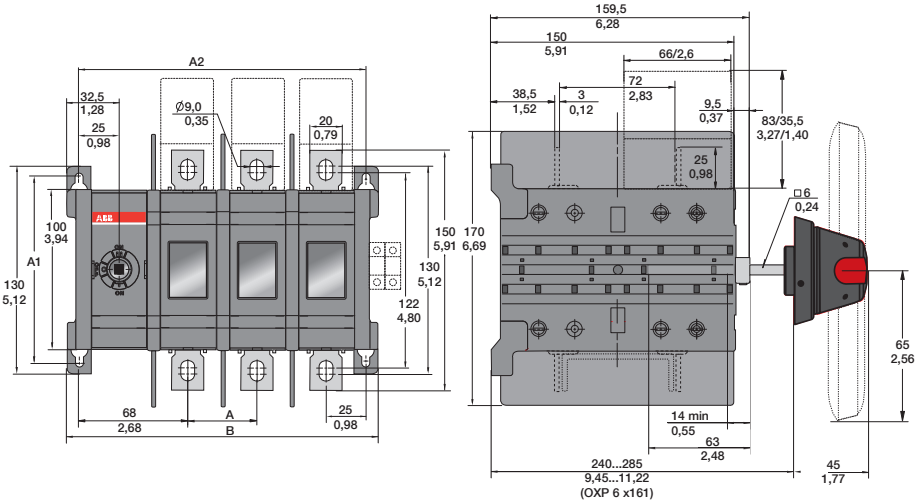

OT400U03/04CP

OT400_C_

	U03 mm/in	U04 mm/in
A	54/2.13	54/2.13
A1	142/5.59	142/5.59
A2	232.5/9.15	286.5/11.28
B	251/9.88	305/12.01

C000009 / OT400U02-04_C_ C /ES

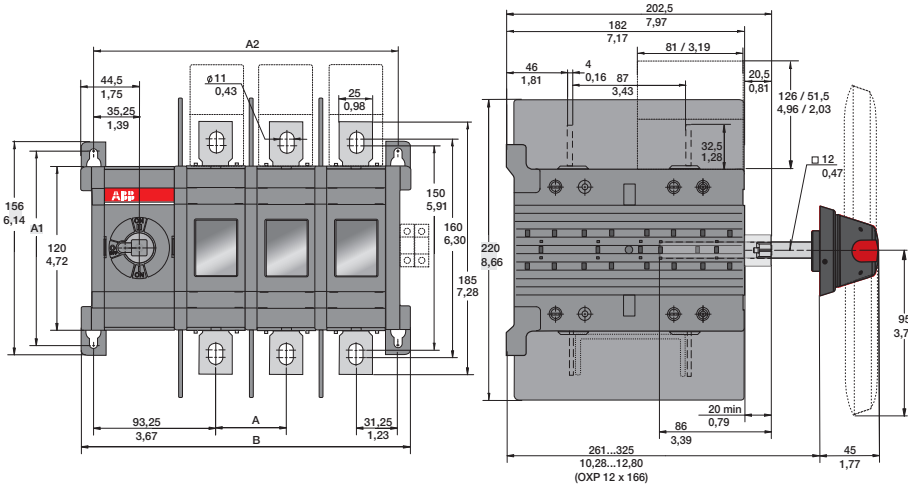

Main dimensions (mm, inches)

Manual change-over switches

Dimensional drawings for UL/CSA -types

OT600U03/04CP

OT600_C_

	U03	U04
	mm/in	mm/in
A1	180/7.09	180/7.09
A2	290/11.42	355/13.98
B	311/12.24	376/14.80
B	450	590

M00087/OT600U02-04C_ C /ES

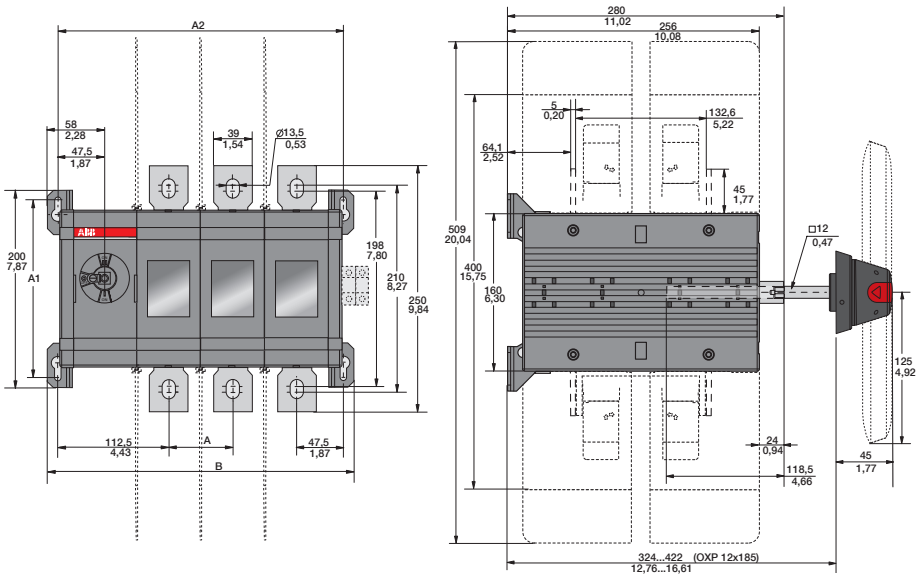

OT800U03/04CP

OT800_C_

	U03	U04
	mm/in	mm/in
A	80/3.15	80/3.15
A1	230/9.06	230/9.06
A2	370/14.56	450/17.72
B	400/15.75	480/18.90

M00156/OT800-1200U_C-1 C /ES

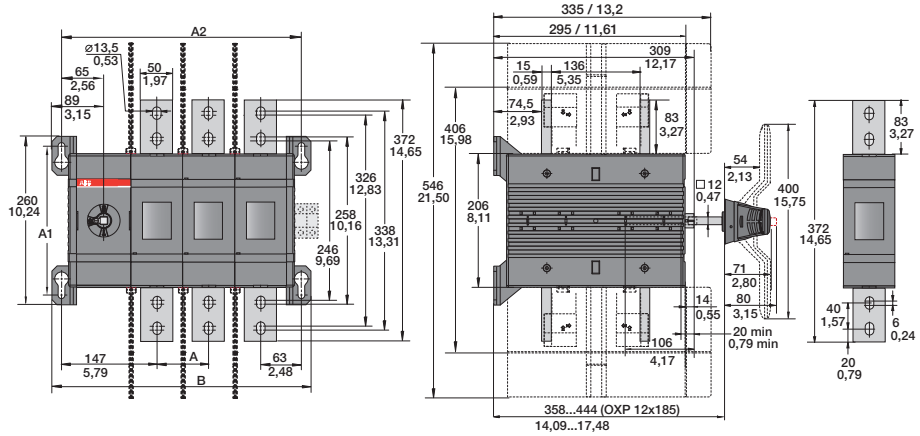

Main dimensions (mm, inches)

Manual and motorized bypass switches

Dimensional drawings for manual bypass switches

OT160...250E03/04Y

OT160...250_Y_

	E03	E04
	mm	mm
A	35	35
A1	118	118
A2	172	207
B	194	229

M00405 / OT160-250E02-04Y A

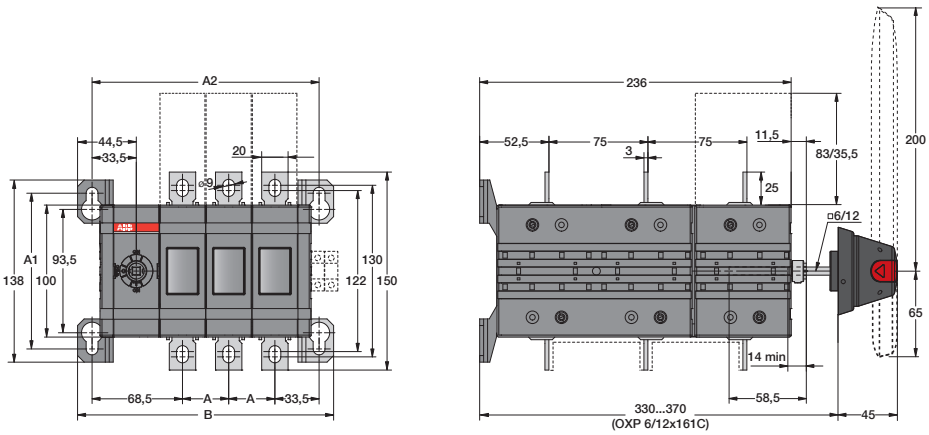

OT315...400E03/04Y

OT315...400E_Y

	E03	E04
	mm	mm
A1	136	136
A2	218	262
B	240	284

M00409 / OT315-400E02-04Y B/E

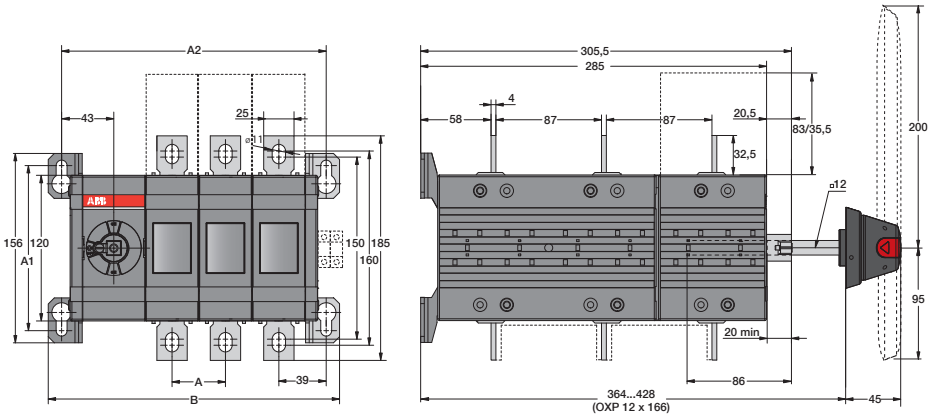

OT630...800E03/04Y

OT630...800E_Y

	E03	E04
	mm	mm
A1	180	180
A2	294	359
B	315	380

M00397 / OT630-800E02-04Y B /ES

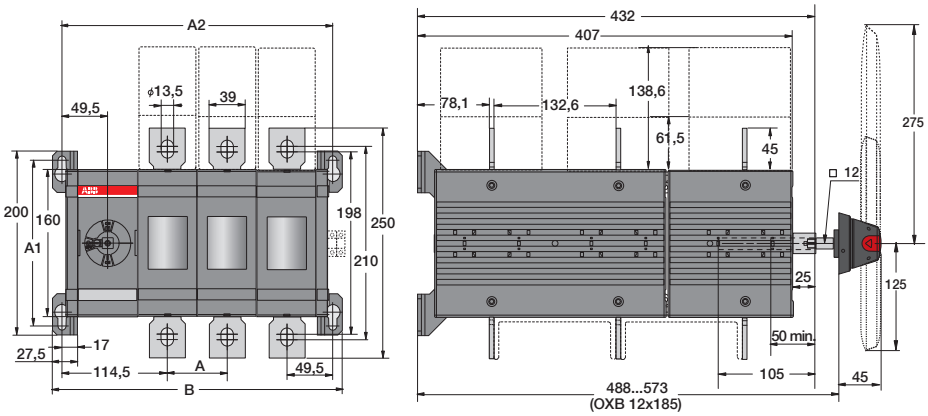

Main dimensions (mm)

Optional accessories for manual change-over switches

Ordering information for handle knobs



OHRS2_



OHRS3_



OHBS9_



OHRS9_



OHBS11



OHBS12

Handle knobs

No shaft needed, direct mounting on the top of the switch.

Suitable for switches	Colour	Type	Order code	Units/ type	Weight/ unit
				pcs	kg
Padlockable in 0-position					
OT16...80F_C	Black	OHBS2/1	1SCA109090R1001	1	0.01
OT16...80F_C	Black	OHBS2	1SCA109089R1001	10	0.01
OT16...80F_C	Red	OHRS2/1	1SCA108599R1001	1	0.01
OT16...80F_C	Red	OHRS2	1SCA108598R1001	10	0.01
OT16...80F_C	Black	OHBS12/1	1SCA109094R1001	1	0.01
OT16...80F_C	Black	OHBS12	1SCA108252R1001	10	0.01
OT16...80F_C	Red	OHRS12/1	1SCA109097R1001	1	0.01
OT16...80F_C	Red	OHRS12	1SCA108253R1001	10	0.01
OT100...125F_C	Black	OHBS11/1	1SCA109093R1001	1	0.02
OT100...125F_C	Black	OHBS11	1SCA109092R1001	10	0.02
Non-padlockable					
OT16...80F_C	Black	OHBS3/1	1SCA108319R1001	1	0.01
OT16...80F_C	Black	OHBS3	1SCA108320R1001	10	0.01
OT16...80F_C	Red	OHRS3/1	1SCA108688R1001	1	0.01
OT16...80F_C	Red	OHRS3	1SCA108667R1001	10	0.01
OT100...125F_C	Black	OHBS9/1	1SCA108689R1001	1	0.01
OT100...125F_C	Black	OHBS9	1SCA108665R1001	10	0.01
OT100...125F_C	Red	OHRS9/1	1SCA108690R1001	1	0.01
OT100...125F_C	Red	OHRS9	1SCA108666R1001	10	0.01

Optional accessories for manual change-over switches

Ordering information for external handles



OHBS2_



OHB45J6_



OHB65J6_



OHY125J12_



OHB274J12_



OHB200J12P_



OHB65J6E69

Selector handle, indication I-O-II

IP65, Nema type 1, 3R, 12. Padlockable in O -position with maximum three padlocks with bail diameter 5...8 mm (two lower holes) and 5...6.3 mm (the upper hole). Door interlock in I- and II-position and when padlocked in O-position.

Suitable for switches	Colour	Shaft diameter mm	Type	Order code	Delivery batch pcs	Weight/ unit kg
OT16...125F_C	Black	6	OHBS2AJE011	1SCA105220R1001	1	0.07
OT16...125F_C	Red-yellow	6	OHYS2AJE011	1SCA105301R1001	1	0.07

Pistol handle, plastic, indication I-O-II

Suitable for switches	Colour	Shaft diameter mm	Type	Order code	Delivery batch pcs	Weight/ unit kg
Padlockable in all positions						
IP65, Nema type 1, 3R, 12. Door interlock in I- and II-position and when padlocked. Padlocking possibility with three padlocks, bail dia Ø 5...10 mm.						
OT16...125F_C	Black	6	OHB45J6E311	1SCA022817R2130	1	0.10
OT16...125F_C	Red-yellow	6	OHY45J6E311	1SCA022817R2300	1	0.10
OT160...250_C	Black	6	OHB65J6E311	1SCA022662R4730	1	0.12
OT315...400_C	Black	12	OHB95J12E311	1SCA022779R2140	1	0.12
OT630...800_C	Black	12	OHB125J12E311	1SCA022615R1730	1	0.14
OT1000...3200_C	Black	12	OHB200J12PE311	1SCA104685R1001	1	0.40
Padlockable in the O-position						
IP65, Nema type 1, 3R, 12. Door interlock in I- and II-position and when padlocked. Padlocking possibility with three padlocks, bail dia Ø 5...10 mm.						
OT16...125F_C	Black	6	OHB45J6E011	1SCA022594R7110	1	0.10
OT16...125F_C	Red-yellow	6	OHY45J6E011	1SCA022817R2210	1	0.10
OT160...250_C	Black	6	OHB65J6E011	1SCA022383R2480	1	0.12
OT160...250_C	Red-yellow	6	OHY65J6E011	1SCA022779R1840	1	0.12
OT315...400_C	Black	12	OHB95J12E011	1SCA022621R0760	1	0.12
OT315...400_C	Red-yellow	12	OHY95J12E011	1SCA022621R0920	1	0.12
OT630...800_C	Black	12	OHB125J12E011	1SCA022589R3340	1	0.14
OT630...800_C	Red-yellow	12	OHY125J12E011	1SCA022615R1650	1	0.14
OT1000...3200_C	Black	12	OHB274J12E011	1SCA122306R1001	1	0.54
OT1000...3200_C	Black	12	OHB200J12PE011	1SCA022873R4230	1	0.40
OT1000...3200_C	Red-yellow	12	OHY200J12PE011	1SCA104686R1001	1	0.40
Handle not padlockable and no door interlocking						
IP65, operating angle 90°.						
OT160...250_CF	Black	6	OHB65J6E69	1SCA112052R1001	1	0.12
OT315...400_CF	Black	12	OHB95J12E69	1SCA112058R1001	1	0.12
OT630...800_CF	Black	12	OHB145J12E69	1SCA112066R1001	1	0.14

Optional accessories for manual change-over and bypass switches

Ordering information for external handles



OHB65J6E65



OHB95J12E65



OTV250ECK



OTV1000ECK



OTV1000ECLK



OHBZX200



OHBZX275

Pistol handle for closed transition types, plastic, indication I - I+II - II
IP65, operating angle 90°.

Suitable for switches	Colour	Shaft diameter mm	Type	Order code	Delivery batch pcs	Weight/ unit kg
Handle not padlockable and no door interlocking						
OT160...250_CL	Black	6	OHB65J6E65	1SCA112050R1001	1	0.12
OT315...400_CL	Black	12	OHB95J12E65	1SCA112056R1001	1	0.12

Plastic handle, direct mounting, indication I-O-II
Includes a shaft and a mechanism cover. The type and ordering numbers are for one piece.

Suitable for switches	Colour	Type	Order code	Delivery batch pcs	Weight/ unit kg
Padlockable with three padlocks in 0-position.					
OT160...250_C	Black	OTV250ECK	1SCA022783R0090	1	0.08
OT315...400_C	Black	OTV400ECK	1SCA022783R0170	1	0.26
OT630...800_C	Black	OTV800ECK	1SCA022797R2470	1	0.30
OT1000...2500_C	Black	OTV1000ECK	1SCA107481R1001	1	0.75
Includes a shaft (no mechanism cover)					
OTM40...125F_C	Black	OHB65D6CM	1SCA022807R9430	1	0.12
Handle not padlockable, operating angle 90°.					
OT160...250_CF	Black	OTV250ECFK	1SCA113141R1001	1	0.08
OT315...400_CF	Black	OTV400ECFK	1SCA113147R1001	1	0.26
OT630...800_CF	Black	OTV800ECFK	1SCA113151R1001	1	0.30

Plastic handle for closed transition types, direct mounting, indication I - I+II - II
Includes a shaft and a mechanism cover. The type and ordering numbers are for one piece.

Suitable for switches	Colour	Type	Order code	Delivery batch pcs	Weight/ unit kg
Handle not padlockable, operating angle 90°.					
OT160...250_CL	Black	OTV250ECLK	1SCA113137R1001	1	0.08
OT315...400_CL	Black	OTV400ECLK	1SCA113143R1001	1	0.26

Shafts, handle, handle extension and bolt kits included as standard

Suitable for switches	Shaft	Handle	Handle extension	Bolt kit
OT160...250_Y	OXP6/12x161C	OHB65J12E011	OHBZX200	M8x25
OT315...400_Y	OXP12x166	OHB95J12E011	OHBZX200	M10x30

Optional accessories for manual change-over switches

Dimensional drawings for external handles

Plastic handles

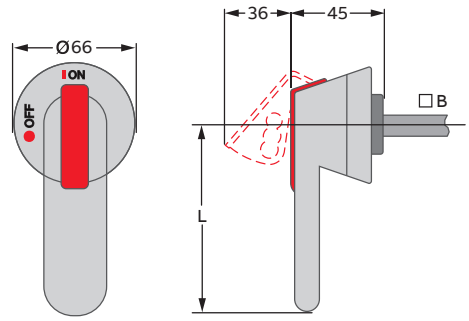

Handle type	Handle length L mm	Shaft B mm
OH_45J6E_	45	6
OH_65J6E_	65	6
OH_95J12E_	95	12
OH_125J12E_	125	12
OH_145J12E_	145	12
OH_175J12E_	175	12
OH_200J12E_	200	12
OH_275J12E_	275	12

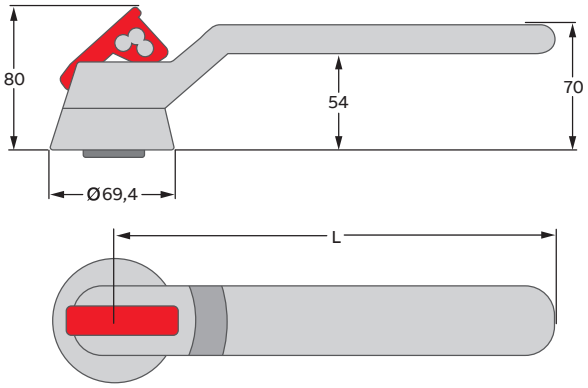

Handle type	L mm
OH_274J12	274

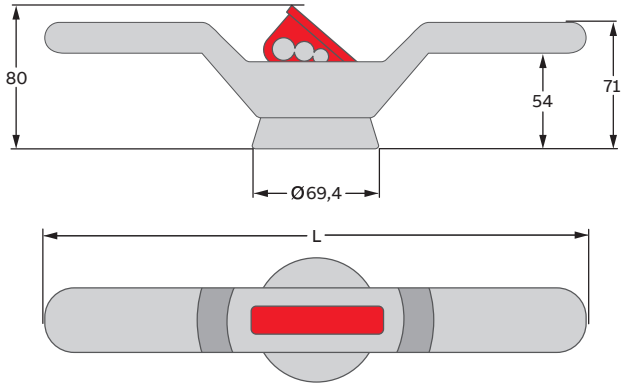

Handle type	L mm
OHB150J12P	300
OHB200J12P	400

Door drilling for OH_ handles

Valid for switches up to 125 A

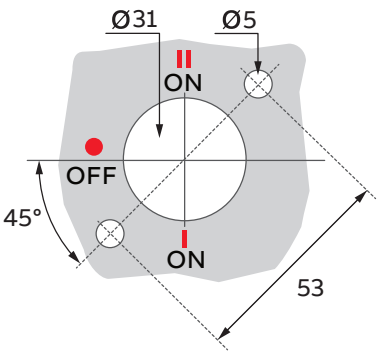

Valid from switches from 200 to 800 A

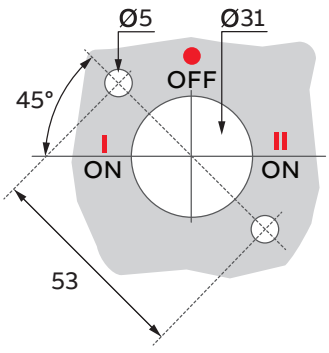

Valid from switches 1000 A and higher (OHB handles)

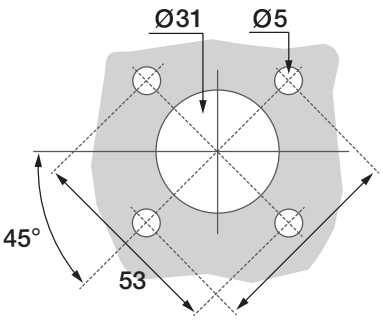

Main dimensions (mm)

Optional accessories for manual change-over switches

Ordering information for extended shafts

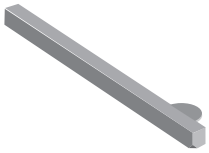

OXS6X_



OXP6X_



OXP12X

Shafts for selector handle handles

For switches	Length mm	Type	Order code	Delivery batch pcs	Weight/unit kg
Shaft diameter 6 mm					
OT16...125F_C	85	OXS6X85	1SCA101647R1001	10	0.03
	105	OXS6X105	1SCA108043R1001	10	0.03
	120	OXS6X120	1SCA101654R1001	10	0.04
	130	OXS6X130	1SCA101655R1001	10	0.04

Shafts for pistol handles

For switches	Length mm	Type	Order code	Delivery batch pcs	Weight/unit kg
Shaft diameter 6 mm					
OT16...125F_C	150	OXP6X150	1SCA022295R5600	10	0.05
	170	OXP6X170	1SCA108224R1001	10	0.05
	265	OXP6X265	1SCA108225R1001	10	0.08
	400	OXP6X400	1SCA108226R1001	10	0.12
Shaft diameter 6 mm					
OT160...250_C	90	OXP6X90	1SCA022064R1180	10	0.03
	130	OXP6X130	1SCA022057R0570	10	0.04
	161	OXP6X161	1SCA022067R1760	10	0.05
	210	OXP6X210	1SCA022295R6080	10	0.06
	290	OXP6X290	1SCA022042R6370	10	0.08
	360	OXP6X360	1SCA022042R6530	10	0.11
Shaft diameter 6/12 mm (6 mm to 12 mm conversion shaft)					
OT160...250E	161	OXP6/12x161C	1SCA111724R1001	1	0.05
Shaft diameter 12 mm					
OT315...400_C	107	OXP12X107	1SCA022029R9750	1	0.12
	148	OXP12X148	1SCA022658R5570	1	0.17
	166	OXP12X166	1SCA022325R7100	1	0.20
	185	OXP12X185	1SCA022325R6710	1	0.22
	250	OXP12X250	1SCA022325R6980	1	0.29
	280	OXP12X280	1SCA022137R5140	1	0.33
	325	OXP12X325	1SCA022042R5810	1	0.38
	395	OXP12X395	1SCA022042R5990	1	0.46
	465	OXP12X465	1SCA022042R6020	1	0.54
OT630...800_C	148	OXP12X148	1SCA022658R5570	1	0.17
	185	OXP12X185	1SCA022325R6710	1	0.22
	250	OXP12X250	1SCA022325R6980	1	0.29
	325	OXP12X325	1SCA022042R5810	1	0.38
	395	OXP12X395	1SCA022042R5990	1	0.46
	465	OXP12X465	1SCA022042R6020	1	0.54
OT1000...3200	166	OXP12X166	1SCA022325R7100	1	0.20
	185	OXP12X185	1SCA022325R6710	1	0.23
	250	OXP12X250	1SCA022325R6980	1	0.29
	325	OXP12X325	1SCA022042R5810	1	0.38
	395	OXP12X395	1SCA022042R5990	1	0.46
	465	OXP12X465	1SCA022042R6020	1	0.54

Optional accessories for manual change-over switches

Ordering information for terminal shrouds

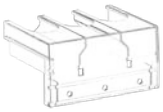

OTS_T3



OTS_T1

Terminal shrouds, transparent plastic

Snap-on mounting to the switches, IP20. The full shrouding of a 3-pole change-over switch is achieved with four 3-pole shrouds.

Suitable for switches	Type	Order code	Delivery batch	Weight/ unit
			pcs	kg
For three pole switches				
OT16...40F_C	OTS40T3	1SCA105317R1001	10	0.01
OT63...80F_C	OTS63T3	1SCA022353R6750	10	0.01
OT100...125F_C	OTS125T3	1SCA022379R9680	10	0.01
For fourth pole				
OTPS40FPN1	OTS40T1	1SCA105314R1001	10	0.01
OTPS40FPN2	OTS40T1	1SCA105314R1001	10	0.01
OTPS80FP	OTS63T1	1SCA022353R6910	10	0.01
OTPS60FP, OTPS125FP	OTS125T1	1SCA022379R9760	10	0.01



OTS_L_



OTS_S_

Terminal shrouds, grey plastic

Snap-on mounting to the switches, IP20. A kit includes three or four shrouds which can be used on either side of the switch. Suitable for the upperswitch. Transparent shrouds for OT_160...2500 available on request, please replace the letter "G" with "T".

Suitable for switches	No. of poles	Description	Type	Order code	Units/ type	Weight/ unit
					pcs	kg
OT_160...250_C	3	Long type	OTS250G1L/3	1SCA022731R8150	3	0.09
OT_160...250_C	3	Short type	OTS250G1S/3	1SCA022731R8310	3	0.06
OT_160...250_C	4	Long type	OTS250G1L/4	1SCA022731R8230	4	0.12
OT_160...250_C	4	Short type	OTS250G1S/4	1SCA022731R8400	4	0.08
OT_315...400_C	3	Long type	OTS400G1L/3	1SCA022736R8840	3	0.15
OT_315...400_C	3	Short type	OTS400G1S/3	1SCA022736R9060	3	0.09
OT_315...400_C	4	Long type	OTS400G1L/4	1SCA022736R9490	4	0.20
OT_315...400_C	4	Short type	OTS400G1S/4	1SCA022736R9650	4	0.12
OT_600...800_C	3	Long type	OTS800G1L/3	1SCA022776R7890	3	0.32
OT_600...800_C	3	Short type	OTS800G1S/3	1SCA022776R8190	3	0.17
OT_600...800_C	4	Long type	OTS800G1L/4	1SCA022776R7970	4	0.42
OT_600...800_C	4	Short type	OTS800G1S/4	1SCA022776R8270	4	0.26
OT_1000...1600_C	3	Long type	OTS1600G1L/3	1SCA022871R9510	3	0.64
OT_1000...1600_C	3	Short type	OTS1600G1S/3	1SCA022871R9600	3	0.37
OT_1000...1600_C	4	Long type	OTS1600G1L/4	1SCA022871R9780	4	0.85
OT_1000...1600_C	4	Short type	OTS1600G1S/4	1SCA022871R9860	4	0.49
OT_2000...2500_C	3	Long type	OTS2500G1L/3	1SCA107261R1001	3	0.77
OT_2000...2500_C	3	Short type	OTS2500G1S/3	1SCA107260R1001	3	0.47
OT_2000...2500_C	4	Long type	OTS2500G1L/4	1SCA107262R1001	4	1.00
OT_2000...2500_C	4	Short type	OTS2500G1S/4	1SCA107271R1001	4	0.61
OT3200_C	3	Long type	OTS4000G1L/3	1SCA129042R1001	3	1.20
OT3200_C	3	Short type	OTS4000G1S/3	1SCA129044R1001	3	1.00
OT3200_C	4	Long type	OTS4000G1L/4	1SCA129043R1001	4	1.40
OT3200_C	4	Short type	OTS4000G1S/4	1SCA129045R1001	4	1.60

Optional accessories for manual change-over switches

Ordering information for phase barriers



OTB_

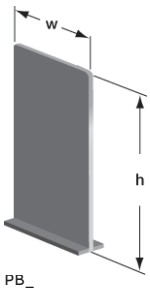

PB_

Phase barriers

The phase barriers designed for ABB Tmax T4-T5 MCCB's can also be used for OT_160...800 change-over switches. 3-pole change-overs need 8 barriers and 4-pole change-overs need 12 barriers for full protection.

Suitable for switches	No. of poles	Height	Cutting width W of the phase barrier	Type	Order code	Units/ type
		mm	mm			pcs
OT_160...250E_C	3	100	55	PB100 low	1SDA054970R1	4
OT_160...250E_C	3	200	55	PB200 high	1SDA054972R1	4
OT_160...250E_C	4	100	55	PB100 low	1SDA054971R1	6
OT_160...250E_C	4	200	55	PB200 high	1SDA054973R1	6
OT_315...400E_C	3	100	67	PB100 low	1SDA054970R1	4
OT_315...400E_C	3	200	67	PB200 high	1SDA054972R1	4
OT_315...400E_C	4	100	67	PB100 low	1SDA054971R1	6
OT_315...400E_C	4	200	67	PB200 high	1SDA054973R1	6
OT_600...800E_C	3	100	90	PB100 low	1SDA054970R1	4
OT_600...800E_C	3	200	90	PB200 high	1SDA054972R1	4
OT_600...800E_C	4	100	90	PB100 low	1SDA054971R1	6
OT_600...800E_C	4	200	90	PB200 high	1SDA054973R1	6

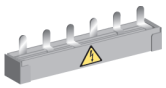

OZXA38

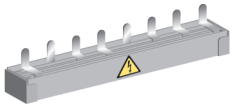

OZXA39



OZXA32



OZXA33

Parallel connection kits

Finger protected connection bars for parallel connection of the upper or lower terminals. The bars accept additional cables, the maximum size is stated below.

Suitable for switches	Cable cross section	Type	Order code	Units/ type	Weight/ unit
	mm^2			pcs	kg
OT16...40F3C	6 (fine stranded), 10 (stranded)	OZXA33	1SCA022685R0310	1	0.02
OT16...40F4C	6 (fine stranded), 10 (stranded)	OZXA32	1SCA022683R4110	1	0.03
OT63...80F3C	25	OZXA38	1SCA022785R2140	1	0.06
OT63...80F4C	25	OZXA39	1SCA022790R3820	1	0.09
OT100...125F3C	50	OZXA40	1SCA022790R3910	1	0.16
OT100...125F4C	50	OZXA41	1SCA022790R4040	1	0.24
OTM40F3C_	2.5...25/2x2.5...16	OMZC003	1SCA121324R1001	1	0.5
OTM40F4C_	2.5...25/2x2.5...16	OMZC004	1SCA121325R1001	1	0.65
OTM40...125F3C_	10...70	OMZC03	1SCA117037R1001	1	0.5
OTM40...125F4C_	10...70	OMZC04	1SCA117038R1001	1	0.65

Optional accessories for manual change-over switches

Ordering information for terminal clamps



OZXT1



OZXT2...3



OZXB2L



OZXB7L



OZXB9

Terminal clamp sets for Al- and Cu-cables insulated versions

Suitable for switches	Cable cross section mm²	Type	Order code	Units/ type pcs	Weight/ unit kg
OT63...125F_C	16...50 Al/2.5...50 Cu	OZXT1	1SCA022469R6310	3	0.06
OT100...125F_C	16...120 Al/Cu	OZXT2	1SCA022620R7200	3	0.21
OT100...125F_C	2x(16...50) Al/Cu	OZXT3	1SCA022639R0720	3	0.21
OTM40...125F_C	16...50 Al/2.5...50 Cu	OZXT1	1SCA022469R6310	3	0.06

Terminal clamp sets for Al- and Cu-cables

Suitable for switches	Cable cross section mm²	Suitable shroud	Type	Order code	Units/ type pcs	Delivery batch pcs	Weight/ unit kg
OT100...125F_	10...70	-	OZXL1	1SCA022439R6770	3	1	0.14
OT_160...250E_C	10...70	OTS250_L	OZXB1L	1SCA022169R2030	3	1	0.15
OT_160...250E_C	10...70	OTS250_L	OZXB1L/1	1SCA022194R0030	1	50	0.05
OT_160...250E_C	25...120	OZXB2K	OZXB2	1SCA022119R7610	3	1	0.34
OT_160...250E_C	25...120	OZXB2K	OZXB2/1	1SCA022194R0200	1	50	0.12
OT_160...250E_C	25...120	OZXB2K	OZXB2L	1SCA022158R7750	3	1	0.43
OT_160...250E_C	25...120	OZXB2K	OZXB2L/1	1SCA022194R0460	1	50	0.15
OT_160...250E_C	95...185	OTS250_L	OZXB8	1SCA022744R1510	3	1	0.50
OT_160...250E_C	95...185	OTS250_L	OZXB8/1	1SCA022744R1600	1	20	0.15
OT_160...250E_C	95...240	OTS250_L	OZXB9	1SCA022750R3210	3	1	0.50
OT_160...250E_C	95...240	OTS250_L	OZXB9/1	1SCA022750R3300	1	20	0.15
OT_315...400E_C	25...120	OZXB2K	OZXB2L	1SCA022158R7750	3	1	0.43
OT_315...400E_C	25...120	OZXB2K	OZXB2L/1	1SCA022194R0460	1	50	0.15
OT_315...400E_C	70...185	OZXB3K	OZXB3	1SCA022136R8100	3	1	1.28
OT_315...400E_C	70...185	OZXB3K	OZXB3/1	1SCA022194R0620	1	20	0.43
OT_315...400E_C	2x(70...185)	OZXB3K	OZXB4	1SCA022137R4760	3	1	1.71
OT_315...400E_C	2x(70...185)	OZXB3K	OZXB4/1	1SCA022194R0890	1	20	0.57
OT_315...400E_C	120...240	OZXB5K	OZXB7	1SCA022185R0040	3	1	1.00
OT_315...400E_C	120...240	OZXB5K	OZXB7/1	1SCA022194R1430	1	20	0.34
OT_315...400E_C	120...240	OZXB5K	OZXB7L	1SCA022185R7130	3	1	1.17
OT_315...400E_C	120...240	OZXB5K	OZXB7L/1	1SCA022194R1600	1	20	0.40
OT_315...400E_C	95...185	OTS400_L	OZXB8	1SCA022744R1510	3	1	0.50
OT_315...400E_C	95...185	OTS400_L	OZXB8/1	1SCA022744R1600	1	20	0.15
OT_315...400E_C	95...240	OTS400_L	OZXB9	1SCA022750R3210	3	1	0.50
OT_315...400E_C	95...240	OTS400_L	OZXB9/1	1SCA022750R3300	1	20	0.15

Optional accessories for manual change-over switches

Ordering information for bridging- and reversing bars



OTZC13...34



OTZC43...44
OTZC53...54

Bridging bars

The bridging bars provide a connection link either on the incoming or outcoming side of the switch.

Suitable for switches	No. of poles	Type	Order code	Units/ type	Weight/ unit
				pcs	kg
OT_160...250_C	3	OTZC13	1SCA022767R6910	3	0.6
OT_160...250_C	4	OTZC14	1SCA022767R7040	4	0.8
OT_315...400_C	3	OTZC23	1SCA022767R7120	3	0.6
OT_315...400_C	4	OTZC24	1SCA022767R7210	4	0.8
OT_600_C...800E_C	3	OTZC33	1SCA022785R7020	3	1.0
OT_600_C...800E_C	4	OTZC34	1SCA022785R7110	4	1.3
OT_1000...1250E_C	3	OTZC43	1SCA022868R0710	3	4.2
OT_1000...1250E_C	4	OTZC44	1SCA022868R0800	4	5.6
OT800U_, OT_1600E_C	3	OTZC53	1SCA022868R0980	3	5.6
OT800U_, OT_1600E_C	4	OTZC54	1SCA022868R1010	4	7.4
OT_2000...2500E_C	3	OTZC63	1SCA022868R1100	3	10.8
OT_2000...2500E_C	4	OTZC64	1SCA022868R1360	4	14.5
OT_3200E_C	3	OTZC73	1SCA128843R1001	3	14.1
OT_3200E_C	4	OTZC74	1SCA128844R1001	4	18.7



OTZR_

Reversing bars

A reversing switch can be built by using phase sequence bars in two phases. The kit includes two phase sequence conversion bars. The missing bridging bars must be ordered separately, see above. For example 3-pole switches: one 4-pole standard bridging bar kit is required (one bar for the reversing side, three bars for the other side).

Suitable for switches	Type	Order code	Units/ type	Weight/ unit
			pcs	kg
OT_160...250_C	OTZR1	1SCA100352R1001	2	0.3
OT_315...400_C	OTZR2	1SCA104647R1001	2	0.3
OT_600_C...800E_C	OTZR3	1SCA100355R1001	2	0.4

Ordering information for fourth poles



OTPS40F

Fourth poles for OT16...125F

Snap-on mounting to the left or right side of the switches, IP20. Simultaneous operation with power poles. The type and ordering numbers are for one piece.

Suitable for switches	Rated current, up to 415V AC-21A/AC-22A/AC-23A I	Type	Order code	Delivery batch	Weight/ unit
	A			pcs	kg
OT16...40F_C	40/40/23	OTPS40FPN1 [1]	1SCA105001R1001	10	0.03
OT16...40F_C	40/40/23	OTPS40FPN2 [2]	1SCA105000R1001	10	0.03
OT63...80F_C	80/80/75	OTPS80FP	1SCA105461R1001	10	0.06
OT100...125F_C	125/125/90	OTPS125FP	1SCA105099R1001	10	0.14

[1] Installation to the left side
[2] Installation to the right side

Optional accessories for manual change-over switches

Ordering information and technical data for auxiliary contacts



OA1G01
OA7G10



OA1G10
OA8G01



OA2G11

Auxiliary contact blocks for OT16...125F

Snap-on mounting to the switch, IP20, max. 2 blocks/ side. Ith = 16 A, suitable for cable cross sections max. 2 x 2.5 mm². Simultaneous action with the main contacts.

Suitable for switches	Contact functions	Installation side	Type	Order code	Delivery batch	Weight/ unit
					pcs	kg
OT_16...125F_C	1NO	Right	OA1G10	1SCA022353R4970	10	0.03
OT_16...125F_C	1NC	Right	OA8G01	1SCA022744R2240	10	0.03
OT_16...125F_C	1NO	Left	OA7G10	1SCA022673R1140	10	0.03
OT_16...125F_C	1NC	Left	OA1G01	1SCA022353R4890	10	0.03
OT63...125F3C	1NO+1NC	Either	OA2G11 [1]	1SCA022379R8100	10	0.03

[1] Not mountable on 4-pole change-over switches

Auxiliary contact blocks for OT160... 3200

Mounting on the right side of the switch: Max. 4 auxiliary contact blocks/switch (totally 8 blocks). Types _AU have gold plated contacts for harsh environments and low operating voltages. Simultaneous action with the main contacts, IP20.

Suitable for switches	Contact functions	Installation side	Type	Order code	Delivery batch	Weight/ unit
					pcs	kg
OT_160...3200_	1NO	Right	OA1G10	1SCA022353R4970	10	0.03
OT_160...3200_	1NC	Right	OA3G01	1SCA022456R7410	10	0.03
OT_160...3200_	1NO	Right	OA1G10AU	1SCA022436R7910	10	0.03
OT_160...3200_	1NC	Right	OA3G01AU	1SCA022819R5260	10	0.03

Auxiliary contacts

Technical data for auxiliary contacts according to IEC 60947-5-1, for OA1G_, OA2G_, OA3G_, OA7G_, OA8G_						
AC15			DC12		DC13	
Ue	Ie	Ue	Ie	P	Ie	P
V	A	V	A	W	A	W
230	6	24	10	240	2	50
400	4	72	4	290	0.8	60
415	4	125	2	250	0.55	70
690	2	250	0.55	140	0.27	70
-	-	440	0.1	44	-	-

Function tables

Function table of OT160...3200, OT160...800_Y and OTM160...2500 auxiliary contacts / Switch I (max. 2+2)			
Handle position	Main contacts	OA1G10 NO	OA3G01 NC
I	closed	closed	open
0	open	open	closed
II	closed	open	closed
Function table of OT160...3200, OT160...800_Y and OTM160...2500 auxiliary contacts / Switch II (max. 2+2)			
Handle position	Main contacts	OA1G10 NO	OA3G01 NC
I	closed	open	closed
0	open	open	closed
II	closed	closed	open

Manual change-over switches

Technical data for OT16...125_C

Switch size				OT16_	OT25_	OT40_	OT63_	OT80_	OT100_	OT125_
Data according to IEC 60947-3										
Rated insulation voltage and rated operational voltage AC20/DC20		Pollution degree 3	V	750	750	750	750	750	750	750
Dielectric strength		50 Hz 1min.	kV	6	6	6	6	6	6	6
Rated impulse withstand voltage			kV	8	8	8	8	8	8	8
Rated thermal current and rated operational current AC20/DC20	/ ambient 40°C	In open air	A	25	32	40	63	80	115	125
	/ ambient 40°C	In enclosure	A	25	32	40	63	80	115	125
	/ ambient 60°C	In enclosure	A	20	25	32	50	63	80	100
..with minimum conductor cross section		Cu	mm²	4	6	10	16	25	35	50
Rated operational current, AC-21A		up to 500 V	A	16	25	40	63	80	100	125
		690 V	A	16	25	40	63	80	100	125
Rated operational current, AC-22A		up to 500 V	A	16	25	40	63	80	100	125
		690 V	A	16	25	40	63	80	100	125
Rated operational current, AC-23A		up to 415 V	A	16	20	23	63	75	80	90
		440 V	A	16	20	23	63	65	65	78
		500 V	A	16	20	23	45	58	60	70
		690 V	A	10	11	12	20	20	40	50
Rated operational current / poles in series, DC-21A		up to 48 V [1]	A	16/1	25/1	32/1	63/1	80/1	100/1	125/1
		110 V	A	16/2	25/2	32/2	63/2	80/2	100/2	125/2
		220 V	A	16/3	25/3	32/3	63/4	63/4	100/4	100/4
		500 V	A	16/4	16/4	16/4	16/4	16/4	-	-
Rated operational current / poles in series, DC-22A		up to 48 V [1]	A	16/1	25/1	32/1	63/1	80/1	100/1	125/1
		110 V	A	16/2	25/2	32/2	63/2	80/2	100/2	125/2
		220 V	A	16/3	25/3	32/4	45/4	45/4	63/4	80/4
		440 V	A	10/4	10/4	10/4	10/4	10/4		
Rated operational current / poles in series, DC-23A		up to 48 V [1]	A	16/1	25/1	32/1	63/1	80/1	100/1	125/1
		110 V	A	16/2	25/2	32/2	63/2	80/2	100/2	125/2
		220 V	A	16/4	25/4	32/4	45/4	45/4	63/4	63/4
		440 V	A	10/4	10/4	10/4	10/4	10/4		
Rated operational power, AC-23A [2] The kW-ratings are accurate for 3-phase 1500 R.P.M. standard asynchronous motors		230 V	kW	3	4	5.5	11	22	22	22
		400...500 V	kW	7.5	9	11	22	37	37	45
		690 V	kW	7.5	9	11	15	18.5	37	45
Rated breaking capacity in category AC-23		up to 415 V	A	128	160	184	360	640	640	720
		500 V	A	128	160	184	360	464	480	560
		690 V	A	80	88	96	160	160	320	400
Rated conditional short-circuit current I_p (r.m.s.) and corresponding max. allowed cut-off current $\hat{i}_c$ (peak) value. The cut-off current $\hat{i}_c$ refers to values listed by fuse manufacturers (single phase test acc. to IEC60269).	Ip (r.m.s.) 50 kA, 415 V Max. OFA_ fuse size	îc (peak)	kA	6.5	6.5	6.5	13	13	16.5	16.5
		gG/aM	A/A	40/32	40/32	40/32	100/80	100/80	125/125	125/125
	Ip (r.m.s.) 100 kA, 500 V Max. OFA_ fuse size	îc (peak)	kA	-	-	-	17	17	-	-
		gG/aM	A	-	-	-	100/80	100/80	-	-
Rated short-time withstand current	I_{cw} (r.m.s.)	690 V 1s	kA	0.5	0.5	0.5	1.5	1.5	2.5	2.5
Rated short-time making capacity [3]	I_{cm} (peak)	690 V	kA	0.7	0.7	0.7	1.4	2.1	3.6	3.6
Power loss / pole	With rated current		W	0.3	0.6	1.6	2.8	4.5	4.0	6.3
Mechanical endurance	Number of oper. cycles [4]		Cycles	10 000	10 000	10 000	10 000	10 000	10 000	10 000
Cable size	Cu-wire size suitable for terminal clamps		mm²	0.75-10	0.75-10	0.75-10	1.5-35	1.5-35	10-70	10-70
			AWG	18-8	18-8	18-8	14-4	14-4	8-00	8-00
Terminal tightening torque	Counter torque required		Nm	0.8	0.8	0.8	2	2	6	6
Operating torque	Typical for 3-pole switches		Nm	1	1	1	1.2	1.2	2	2
Weight without accessories	3-pole switch		kg	0.25	0.25	0.25	0.64	0.64	0.90	0.90
	4-pole switch		kg	0.31	0.31	0.31	0.70	0.70	1.18	1.18
Data according to UL508 (Listed)										
Current			A	16	25	40	60	80	-	-
Horsepower, 3-phase		200 V	HP	3	7.5	10	15	20	-	-
		208 V	HP	3	7.5	10	15	20	-	-
		240 V	HP	5	7.5	10	15	20	-	-
		480 V	HP	10	15	20	30	40	-	-
		600 V	HP	10	20	25	30	40	-	-

[1] Below 48 V, two poles in parallel up to OT80 are recommended particularly in polluted atmosphere
[2] These values are given for guidance and may vary according to the motor manufacturer
[3] Short circuit duration >50ms, without fuse protection
[4] Operating cycle: O - I - O - II - O

Manual change-over switches

Technical data for OT160...800_C

Switch size				OT_160_	OT_200_	OT_250_	OT_315_	OT_400_	OT_630_	OT_800_
Data according to IEC 60947-3										
Rated insulation voltage and rated operational voltage AC20/DC20		Pollution degree 3	V	1 000	1 000	1 000	1 000	1 000	1 000	1 000
Dielectric strength		50 Hz 1min.	kV	10	10	10	10	10	10	10
Rated impulse withstand voltage			kV	12	12	12	12	12	12	12
Rated thermal current and rated operational current AC20/DC20 ..with minimum conductor cross section	/ ambient 40°C	In open air	A	160	200	250	315	400	630	800
	/ ambient 40°C	In enclosure	A	160	200	250	315	400	630	800
		Cu	mm²	70	95	120	185	240	2x185	2x240
Rated operational current, AC-21A		up to 500 V	A	160	200	250	315	400	630	800
		690 V	A	160	200	250	315	400	630	800
Rated operational current, AC-22A		up to 500 V	A	160	200	250	315	400	630	800
		690 V	A	160	200	250	315	400	630	800
Rated operational current, AC-23A		up to 500 V	A	160	200	250	315	400	630	800
		690 V	A	160	200	250	315	400	630	800
Rated operational current / poles in series, DC-21A [6]		≤ 110 V	A	160/2	200/2	250/2	315/1 [1]	400/1 [1]	630/1	800/1
		220 V	A	160/2	200/2	250/2	315/2 [1]	400/2 [1]	630/1	800/1
		440 V	A	160/3	200/3	230/3	315/3	360/3	630/2	720/2
		660 V	A	160/4	200/4	200/4	315/4	315/4	630/4 [1]	630/4 [1]
Rated operational power, AC-23A [2] The kW-ratings are accurate for 3-phase 1500 R.P.M. standard asychronous motors		230 V	kW	45	60	75	100	132	200	250
		400 V	kW	90	110	140	160	220	355	450
		415 V	kW	90	110	145	180	230	355	450
		500 V	kW	110	132	170	220	280	400	560
		690 V	kW	160	200	250	315	400	630	800
Rated breaking capacity in category AC-23		up to 500 V	A	1 280	1 600	2 000	2 520	3 200	5 040	6 400
		690 V	A	1 280	1 600	2 000	2 520	3 200	5 040	6 400
Rated conditional short-circuit current I_p (r.m.s.) and cut-off current $\hat{i}_c$ (peak) value. The cut-off current $\hat{i}_c$ refers to values listed by fuse manufacturers (single phase test acc. to IEC60269).	Ip (r.m.s.) 80 kA, 415 V	îc (peak)	kA	40.5	40.5	40.5	59	59	83.5	83.5
	Max. OFA_ fuse size	gG/aM	A/A	355/315	355/315	355/315	500/500	500/500	800/1000	800/1000
	Ip (r.m.s.) 100 kA, 500 V	îc (peak)	kA	40.5	40.5	40.5	61.5	61.5	90	90
	Max. OFA_ fuse size	gG/aM	A	315/315	315/315	315/315	500/450	500/450	800/800	800/800
	Ip (r.m.s.) 80 kA, 690 V	îc (peak)	kA	40.5	40.5	40.5	59	59	83.5	83.5
	Max. OFA_ fuse size	gG/aM	A	355/315	355/315	355/315	500/500	500/500	800/1000	800/1000
Rated short-time withstand current	I_{cw} (r.m.s.)	690 V 0.15s	kA	15	15	15	31	31	38	38
		690 V 0.25s	kA	15	15	15	24	24	36	36
		690 V 1s	kA	8	8	8	15	15	20	20
Rated short-time making capacity [3]	I_{cm} (peak) [4]	690 V	kA	30	30	30	65	65	80	80
Power loss / pole	With rated current		W	3.2	4	6.5	6.5	10	25	40
Mechanical endurance	Number of oper. cycles [5]		Cycles	8 000	8 000	8 000	8 000	8 000	5 000	5 000
Terminal bolt size	Metric thread diameter x length		mm	M8x25	M8x25	M8x25	M10x30	M10x30	M12x40	M12x40
Terminal tightening torque	Counter torque required		Nm	15-22	15-22	15-22	30-44	30-44	50-75	50-75
Operating torque	3-pole change-over switches		Nm	7	7	7	16	16	27	27
Weight without accessories	Manual change-over switches	3-poles	kg	2.5	2.5	2.5	4.7	4.7	12.8	12.8
		4-poles	kg	3.2	3.2	3.2	5.8	5.8	15.6	15.6
Data according to IEC 60947-6-1										
Class of equipment				PC	PC	PC	PC	PC	PC	PC
Rated short-time withstand current	I_{cw} (r.m.s.)	690 V 0.1s	kA	15	15	15	25	25	38	38
Rated operational current, AC-31B		up to 415 V	A	160	200	250	315	400	630	800
Rated operational current, AC-33B		up to 415 V	A	160	200	250	315	400	630	800

[1] Utilization category B
[2] These values are given for guidance and may vary acc. to the motor manufacturer
[3] Short circuit duration > 50ms, without fuse protection
[4] Max. distance from switch frame to nearest busbar / cable support 150 mm
[5] Operating cycle: O - I - O - II - O
[6] Further ratings on request
1000 V ratings on request

Manual change-over switches

Technical data for OT1000...3200_C

Switch size				OT_1000_	OT_1250_	OT_1600_	OT_2000_	OT_2500_	OT_3200_
Data according to IEC 60947-3									
Rated insulation voltage and rated operational voltage AC20/DC20		Pollution degree 3	V	1 000	1 000	1 000	1 000	1 000	1 000
Dielectric strength		50 Hz 1min.	kV	10	10	10	10	10	10
Rated impulse withstand voltage			kV	12	12	12	12	12	12
Rated thermal current and rated operational current AC20/DC20	/ ambient 40°C	In open air	A	1 000	1 250	1 600	2 000	2 500	3 200
	/ ambient 40°C	In enclosure	A	-	-	-	-	-	-
..with minimum conductor cross section		Cu	mm²	2x300	2x400	2x500	3x500	4x500	4x1000
Rated operational current, AC-21A		up to 500 V	A	1 000	1 250	1 600	2 000 [5]	2 500 [5]	3 200 [5]
		690 V	A	1 000	1 250	1 600	-	-	-
Rated operational current, AC-22A		up to 500 V	A	1 000	1 250	1 600	-	-	-
		690 V	A	1 000	1 250	1 600	-	-	-
		up to 500 V	A	1 000	1 250	1 250	-	-	-
		690 V	A	1 000	1 250	1 250	-	-	-
Rated operational power, AC-23A [1]		230 V	kW	315	400	400	-	-	-
		415 V	kW	560	710	710	-	-	-
		500 V	kW	710	900	900	-	-	-
		690 V	kW	1 000	1 200	1 200	-	-	-
		up to 500 V	A	10 000	10 000	10 000	-	-	-
		690 V	A	10 000	10 000	10 000	-	-	-
Rated conditional short-circuit current I_p (r.m.s.) and cut-off current $\hat{i}_c$ (peak) value. The cut-off current $\hat{i}_c$ refers to values listed by fuse manufacturers (single phase test acc. to IEC60269).	I_p (r.m.s.) 80 kA, 415 V	$\hat{i}_c$ (peak)	kA	100	100	100	-	-	-
	Max. OFA_ fuse size	gG/aM	A/A	1 250/1 250	1 250/1 250	1 250/1 250	-	-	-
	I_p (r.m.s.) 100 kA, 500 V	$\hat{i}_c$ (peak)	kA	106	106	106	-	-	-
	Max. OFA_ fuse size	gG/aM	A	1 250/1 250	1 250/1 250	1 250/1 250	-	-	-
Rated short-time withstand current	I_{cw} (r.m.s.)	690 V 0.15s	kA	50	50	50	50	50	-
		690 V 0.25s	kA	50	50	50	50	50	-
		690 V 1s	kA	50	50	50	55	55	65
Rated short-time making capacity [2]	I_{cm} (peak) [3]	690 V	kA	92	92	92	110	110	143
Power loss / pole	With rated current		W	19	29	48	55	85	95
Mechanical endurance	Number of oper. cycles [4]		Cycles	3 000	3 000	3 000	2 000	2 000	2 000
Terminal bolt size	Metric thread diameter x length		mm	M12x60	M12x60	M12x60	M12x60	M12x60	M12x100
Terminal tightening torque	Counter torque required		Nm	50-75	50-75	50-75	50-75	50-75	50-75
Operating torque	3-pole change-over switches		Nm	78	78	78	78	78	80
Weight without accessories	Manual change-over switches	3-poles	kg	32.3	32.3	34.8	48	48	57
		4-poles	kg	40.2	40.2	43.3	60	60	72
Data according to IEC 60947-6-1									
Class of equipment				PC	PC	PC	PC	PC	-
Rated short-time withstand current	I_{cw} (r.m.s.)	690 V 0.1s	kA	50	50	50	50	50	-
Rated operational current, AC-31B		up to 415 V	A	1 000	1 250	1 600	2 000	2 000	-
Rated operational current, AC-33B		up to 415 V	A	1 000	1 000	1 000	-	-	-

[1] These values are given for guidance and may vary acc. to the motor manufacturer
[2] Short circuit duration > 50ms, without fuse protection
[3] Max. distance from switch frame to nearest busbar / cable support 150 mm
[4] Operating cycle: O - I - O - II - O
[5] Category AC-21B, up to 415V
1000 V ratings on request

Manual change-over switches

Technical data for UL/CSA switches OT30...100_C, OT200...800U_C

Switch size				OT30_	OT60_	OT100_	OT200U_	OT400U_	OT600U_	OT800U_
Data according to UL and CSA										
Standards				UL98 CSA 22.2#4	UL98 CSA 22.2#4	UL98 CSA 22.2#4	UL98 CSA 22.2#4	UL98 CSA 22.2#4	UL98 CSA 22.2#4	UL98 CSA 22.2#4
General use ratings, 1- or 3-phase ratings			V A	600 30	600 60	600 100	600 200	600 400	600 600	600 800
Horsepower, 3-phase ratings		240V	HP	10	20	30	75	125	200	250
		480V	HP	20	40	50	150	250	450	500
		600V	HP	30	40	50	200	350	500	500
Short-circuit ratings	Required protection	Circuit breaker	kA	-	-	-	14	25	35	42
		Class J/L fuse	kA	50 / -	50 / -	50 / -	65/100	100	100	100
		...fuse size	A	60	150	150	400/200	600	800	800
		Class RK5 fuse	kA	-	-	-	-	-	100	-
		...fuse size	A	-	-	-	-	-	600	-
Data according to IEC 60947-3										
Rated insulation voltage and rated operational voltage AC20/DC20	Pollution degree 3		V	750	750	750	1 000	1 000	1 000	1 000
Dielectric strength	50 Hz 1min.		kV	6	6	6	10	10	10	10
Rated impulse withstand voltage			kV	8	8	8	12	12	12	12
Rated thermal current and rated operational current AC20/DC20	/ ambient 40°C	In open air	A	40	63	100	250	400	800	1600
..with minimum conductor cross section		Cu	AWG/ mm²	14 - 4	14 - 4	8 - 1/0	120	240	2x240	2x500
Rated operational current, AC-21A		up to 690 V	A	40	63	100	250	400	800	1 600
Rated operational current, AC-22A		up to 500 V	A	40	63	100	250	400	800	1 600
		690 V	A	40	63	100	250	400	800	1 600
Rated operational current, AC-23A		up to 500 V	A	40	63	60	250	400	800	1 250
		690 V	A	40	40	40	250	400	800	1 250
Rated conditional short-circuit current I_p (r.m.s.) and corresponding max. allowed cut-off current $\hat{i}_c$ peak value [1]	I_p (r.m.s.) : 100 kA, 500 V	$\hat{i}$c (peak)	kA	-	-	-	40.5	61.5	90	106
	Max. OFA_ fuse size	gG/aM	A	-	-	-	315/315	500/450	800/800	1 250/1 250
	I_p (r.m.s.) : 80 kA, 690 V	$\hat{i}$c (peak)	kA	-	-	-	40.5	59	83.5	-
	Max. OFA_ fuse size	gG/aM	A	-	-	-	355/315	500/500	800/1 000	-
Rated short-time withstand current	Icw (r.m.s.)	690V, 1s	kA	2.5	2.5	2.5	8	15	20	50
Rated short-circuit making capacity	I_{cm} (peak)	690V	kA	3.6	3.6	3.6	30	65	80	92
Mechanical endurance	Number of operating cycles [2]		Cycles	6000	6000	6000	8 000	8 000	5 000	3 000
Terminal bolt size	Metric thread diameter x length		mm	-	-	-	M8x25	M10x30	M12x40	M12x60
Terminal tightening torque	Counter torque required		Nm	-	-	-	15...22	30...44	50...75	50...75
Operating torque	3-pole switches		Nm	2	2	2	7	16	27	78
Weight without accessories	3-pole switch		kg	0.90	0.90	0.90	2.8	5.0	13.1	34.8
	4-pole switch		kg	1.18	1.18	1.18	3.5	6.1	15.9	43.3
Data according to IEC 60947-6-1										
Class of equipment				-	-	-	PC	PC	PC	PC
Rated short-time withstand current	Icw (r.m.s.)	690 V 0.1s	kA	-	-	-	15	25	38	50
Rated operational current, AC-31B		up to 415 V	A	-	-	-	250	400	800	1 600
Rated operational current, AC-33B		up to 415 V	A	-	-	-	250	400	800	1 000

[1] The fuse in single-phase test according to IEC 60269
[2] Operating cycle: O - I - O - II - O

03

Motorized change-over switches



Motorized change-over switches

Introduction to motorized change-over switches

General information	48
Product range	49
Type codes	50

Ordering information

OTM40...OTM125_CMA	52
OTM160...OTM3200_CM	54
OTM160...OTM400_CM	55
OTM630...OTM3200_CM	56
OTM160...OTM2500_CM	57
OTM160...800E_YM_C	60

Dimension drawings

Motorized change-over switches	62
Manual and motorized bypass switches	66
Automatic control units	75
Dual power sources	77

Ordering information for optional accessories

Handles and storage clips	68
Terminal shrouds	69
Phase barriers	70
Bridging- and reversing bars	71
Voltage sensing connector	72
Auxiliary contacts	73
Automatic control units and related accessories	74
Dual power sources	76

Technical data

Automatic control units	75
Dual power sources	77
OTM16...125_C	79
OTM160...800_C	80
OTM1000...3200C	81
OTM40...125_C	82
OTM160...3200_C	83

Motorized change-over switches

Uninterrupted power supply with motorized functionality

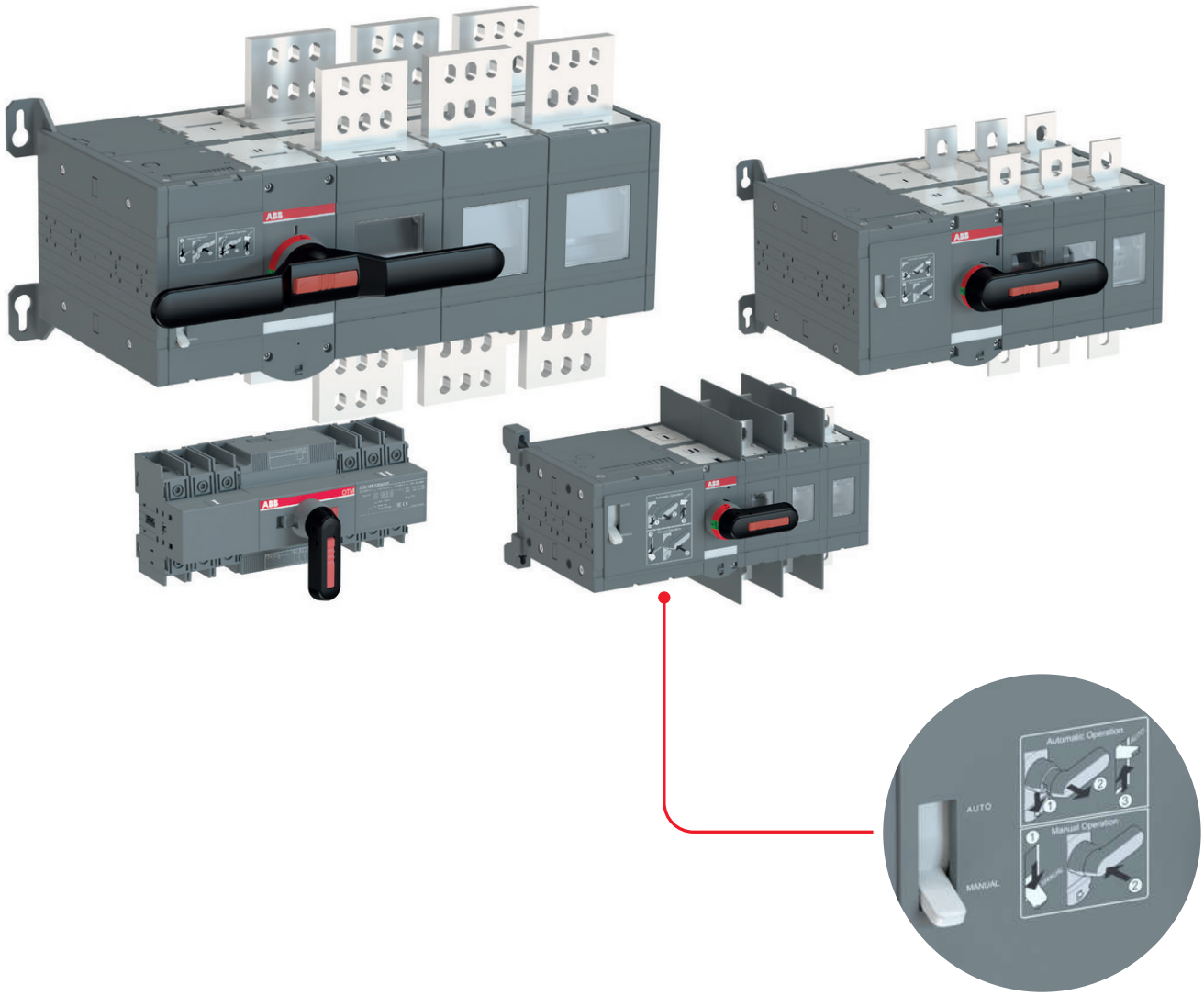

High performance level
Ensuring a high performance level for you is of the utmost importance to us. In change-over applications where the loaded switch may need to be operated remotely, adequate durability has been ensured by testing against the IEC 60947-6-1 standard in the specification of endurance requirements.

Safe and reliable
Our switches come equipped with a comprehensive range of inbuilt safety features such as mechanical interlock, which ensures the isolation of the two asynchronous power supplies. This eliminates risk of short-circuiting between them. The motorized change-over switches are also equipped with a handle for manual operation in case of emergency.

Space-saving design
ABB provides compact and cost-effective components for any and all installations. On average, our motorized change-over switches are 20% smaller than other similar products on the market.

Motorized change-over switches

Open transition from 40 to 3200 Amperes

Manual operation, change-over switches 16-125A





Types					OTM40F_C					OTM63F_C OTM80F_C OTM100F_C OTM125F_C
Ith	40 A	63 A	80 A	115 A	125 A	40 A	63 A	80 A	115 A	125 A
I_e /AC-22A, < 415V	40 A	63 A	80 A	100 A	125 A	40 A	63 A	80 A	100 A	125 A
I_e /AC-23A, < 415V	40 A	63 A	80 A	80 A	90 A	40 A	63 A	80 A	80 A	90 A

Motor operation, change-over switches 160-800 A









Types			OTM160E_C OTM200E_C OTM250E_C			OTM160E_WC OTM200E_WC OTM250E_WC		OTM315E_C OTM400E_C		OTM630E_C OTM800E_C
Ith	160 A	200 A	250 A	160 A	200 A	250 A	315 A	400 A	630 A	800 A
I_e /AC-22A, < 415V	160 A	200 A	250 A	160 A	200 A	250 A	315 A	400 A	630 A	800 A
I_e /AC-23A, < 415V	160 A	200 A	250 A	160 A	200 A	250 A	315 A	400 A	630 A	800 A
I_e/AC-31B, < 415V	160 A	200 A	250 A	160 A	200 A	250 A	315 A	400 A	650 A	720 A

Motor operation, change-over switches 1000-3200 A







Types			OTM1000E_C OTM1250E_C		OTM1600E_C			OTM2000E_C OTM2500E_C OTM3200E_C
Ith /A	1000 A	1250 A		1600 A	2000 A	2500 A	3200 A	
I_e /AC-t22A, < 415V	1000 A	1250 A		1600 A	-	-	-	
I_e /AC-21B, < 415V	-	-		-	2000 A	2500 A	3200 A	
I_e/AC-31B, < 415V	1000 A	1250 A		1600 A	-	-	-	

Motorized change-over switches
Type codes

Type codes
Understanding the type code keys below will help you quickly identify the correct product for your needs. The simple naming system allows you to see the products type, Ampere rating, standard classification and number of poles, all in one glance.

Explanation of the types OTM40...125_C

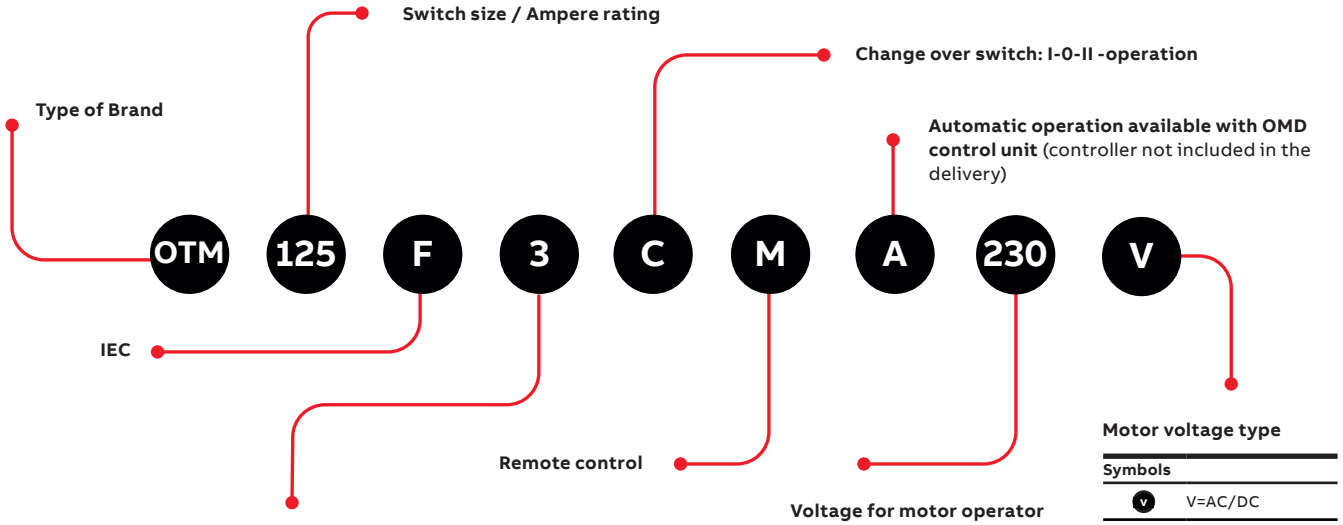

Symbols	
3	3 poles
4	4 poles

Symbols	
230	110...240 V AC/DC
24	24 V AC/DC

Symbols	
V	V=AC/DC

Motorized change-over switches

Type codes

Type codes

Understanding the type code keys below will help you quickly identify the correct product for your needs. The simple naming system allows you to see the products type, Ampere rating, standard classification and number of poles, all in one glance.

Explanation of the types OTM160...2500_C

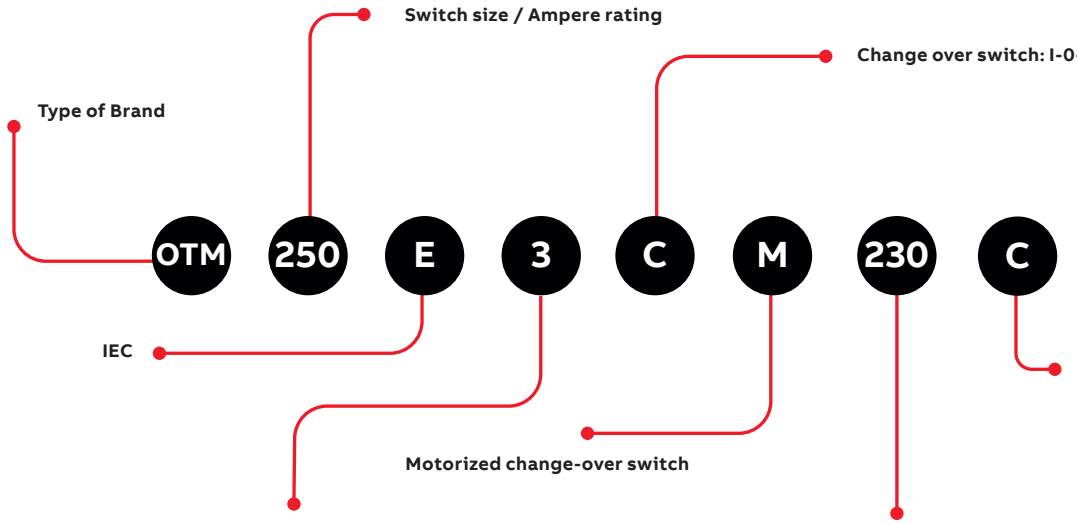

Symbols	
V	AC/DC
C	AC
D	DC

Symbols	
2	2 poles
3	3 poles
4	4 poles

Symbols	
230	220...240 V AC [1]
110	110...125 V AC/DC
48	48 V AC/DC
24	24 V AC/DC

[1] 2-pole versions, motor voltage Ue 220...240V AC/DC

Motorized change-over switches

Ordering information for OTM40...OTM125_CMA

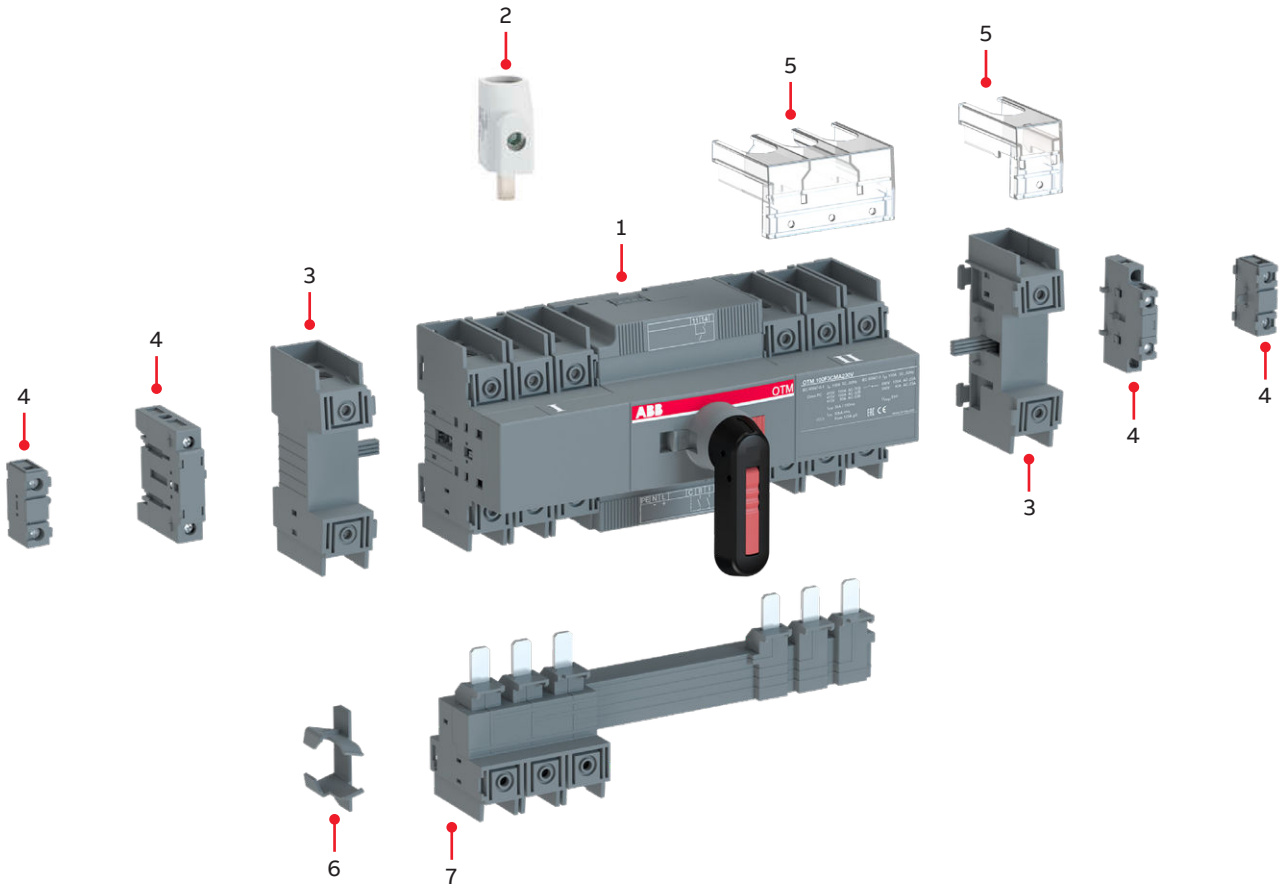

Motorized change-over switch accessory guide

1. Motorized change-over switch
2. Terminal clamp including voltage sensing connector
3. Fourth pole
4. Auxiliary contact (Different types for left and right side)
5. Terminal shroud
6. Handle storage clip
7. Parallel connection kit

To learn how to install the key accessories, watch the video

Motorized transfer switches OTM 40...125 A

Please note that not all listed accessories are automatically included in your order.
See next page for recommendations.

Motorized change-over switches

Ordering information for OTM40...OTM125_CMA



OTM40...125F3C_



OTM40...125F4C_

Motorized change-over switches, open transition, OTM40...OTM125_CMA

Delivered with a handle for manual operation, a storage clip for the handle and male connectors for control circuit.

No. of poles	Rated current AC-21A, AC-22A ≤ 415V, I	Rated power 400V S	Rated current AC-31B/ AC-33B 415V, I	Type	Order code	Weight/ unit
	A	kVA	A			kg
Motor voltage Ue 110...240 V AC/DC						
3	40	27	40/40	OTM40F3CMA230V	1SCA120096R1001	1.64
4	40	27	40/40	OTM40F4CMA230V	1SCA120102R1001	1.86
3	63	43	63/63	OTM63F3CMA230V	1SCA120095R1001	1.64
4	63	43	63/63	OTM63F4CMA230V	1SCA120101R1001	1.86
3	80	55	80/80	OTM80F3CMA230V	1SCA120093R1001	1.64
4	80	55	80/80	OTM80F4CMA230V	1SCA120100R1001	1.86
3	100	70	100/80	OTM100F3CMA230V	1SCA120071R1001	1.64
4	100	70	100/80	OTM100F4CMA230V	1SCA120098R1001	1.86
3	125	86	125/80	OTM125F3CMA230V	1SCA120070R1001	1.64
4	125	86	125/80	OTM125F4CMA230V	1SCA120097R1001	1.86
Motor voltage Ue 24 V DC						
3	40	27	40/40	OTM40F3CMA24D	1SCA124061R1001	1.64
4	40	27	40/40	OTM40F4CMA24D	1SCA124063R1001	1.86
3	63	43	63/63	OTM63F3CMA24D	1SCA124060R1001	1.64
4	63	43	63/63	OTM63F4CMA24D	1SCA124064R1001	1.86
3	80	55	80/80	OTM80F3CMA24D	1SCA124059R1001	1.64
4	80	55	80/80	OTM80F4CMA24D	1SCA124062R1001	1.86
3	100	70	100/80	OTM100F3CMA24D	1SCA124058R1001	1.64
4	100	70	100/80	OTM100F4CMA24D	1SCA124066R1001	1.86
3	125	86	125/80	OTM125F3CMA24D	1SCA124057R1001	1.64
4	125	86	125/80	OTM125F4CMA24D	1SCA124065R1001	1.86

Handles included as standard, cable cross section



OMZC_

Suitable for switches	Cable cross section mm²	Handle
OTM40F_CM	2.5...25 or 2 x 2.5...16	OHB65D6CM
OTM63...125F_CM	10 ... 70	OHB65D6CM

Recommended accessories



OZXT6

Suitable for switches	Cable cross section mm²	Type	Order code	Units/ type pcs	Weight/ unit kg
Parallel connection kits					
OTM40F3C_	2.5...25/2x2.5...16	OMZC003	1SCA121324R1001	1	0.5
OTM40F4C_	2.5...25/2x2.5...16	OMZC004	1SCA121325R1001	1	0.65
OTM40...125F3C_	10...70	OMZC03	1SCA117037R1001	1	0.5
OTM40...125F4C_	10...70	OMZC04	1SCA117038R1001	1	0.65
Terminal clamp					
OTM40...125F_	16...50 Al/2.5...50 Cu	OZXT6	1SCA122537R1001	3	0.06

Motorized change-over switches

Ordering information for OTM160...OTM3200_CM

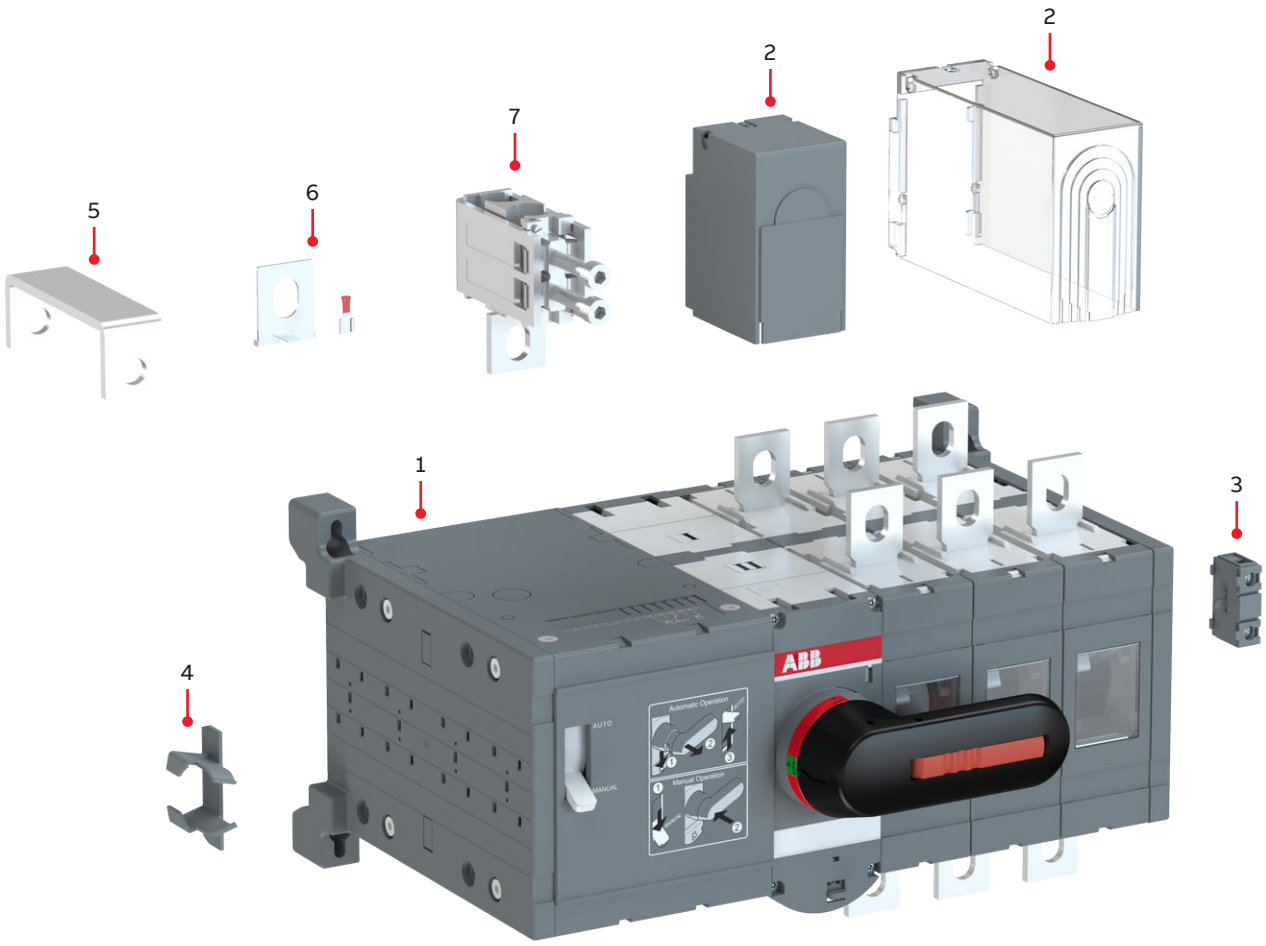

Motorized change-over switch accessory guide

1. Motorized change-over switch
2. Terminal shroud
3. Auxiliary contact
4. Storage for handle and fuses
5. Bridging bar
6. Voltage sensing connectors
7. Terminal clamp

To learn how to install the key accessories, watch the video

Motorized transfer switches OTM 160...800 A

Please note that not all listed accessories are automatically included in your order.
See next page for recommendations.

Motorized change-over switches

Ordering information for OTM160...OTM400_CM



OTM160...250E2CM230V



OTM160...250E2WCM230V



OTM160...250E3CM230C



OTM160...250E4WCM230C



OTM315...400E3CM230V



OTM315...400E4CM230C

Motorized change-over switches, open transition, OTM160...OTM400_CM
Delivered with a handle for manual operation, bolt kit with nut and washers for all terminals and male connectors for control circuits. Types OTM160...400E include a storage clip for the handle and spare fuses. Types OTM160...250E_W are equipped with extended phase distance.

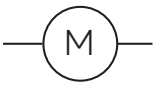

230VAC

No. of poles	Rated current (1) AC-21A, AC-22A ≤ 415V, I	Rated power 400V S	Rated current AC-31B/ AC-33B 415V, I	Type	Order code	Weight/ unit
	A	kVA	A			kg
Motor voltage U_e 220...240 V AC [1]						
2	160	110	160/160	OTM160E2CM230V	1SCA121216R1001	5.7
2	160	110	160/160	OTM160E2WCM230V	1SCA121218R1001	5.9
3	160	110	160/160	OTM160E3CM230C	1SCA022845R8610	6.6
3	160	110	160/160	OTM160E3WCM230C	1SCA022846R4000	6.9
4	160	110	160/160	OTM160E4CM230C	1SCA022848R1510	7.5
4	160	110	160/160	OTM160E4WCM230C	1SCA022846R7440	7.9
2	200	135	200/200	OTM200E2CM230V	1SCA121209R1001	5.7
2	200	135	200/200	OTM200E2WCM230V	1SCA121294R1001	5.9
3	200	135	200/200	OTM200E3CM230C	1SCA022845R8960	6.6
3	200	135	200/200	OTM200E3WCM230C	1SCA022846R3960	6.9
4	200	135	200/200	OTM200E4CM230C	1SCA022846R1590	7.5
4	200	135	200/200	OTM200E4WCM230C	1SCA022846R7870	7.9
2	250	170	250/250	OTM250E2CM230V	1SCA121211R1001	5.7
2	250	170	250/250	OTM250E2WCM230V	1SCA121220R1001	5.9
3	250	170	250/250	OTM250E3CM230C	1SCA022845R9260	6.6
3	250	170	250/250	OTM250E3WCM230C	1SCA022846R4770	6.9
4	250	170	250/250	OTM250E4CM230C	1SCA022846R1910	7.5
4	250	170	250/250	OTM250E4WCM230C	1SCA022846R8250	7.9
2	315	215	315/315	OTM315E2CM230V	1SCA121221R1001	9.7
3	315	215	315/315	OTM315E3CM230C	1SCA022847R1210	11.1
4	315	215	315/315	OTM315E4CM230C	1SCA022847R2870	12.5
2	400	275	400/400	OTM400E2CM230V	1SCA121226R1001	9.7
3	400	275	400/400	OTM400E3CM230C	1SCA022847R1630	11.1
4	400	275	400/400	OTM400E4CM230C	1SCA022847R3250	12.5

[1] 2-pole versions, motor voltage Ue 220...240V AC/DC

Handles and bolt kits included as standard

Suitable for switches	Handle	Bolt kit
OTM160...250	OTV250ECMK	M8x25
OTM315...400	OTV400ECMK	M10x30

Recommended accessories: Bridging bars and voltage sensing connectors

See pages 65-66

Motorized change-over switches

Ordering information for OTM630...OTM3200_CM



OTM630...800E2CM230V



OTM630...800E3CM230C



OTM1000...1250E3CM230C



OTM1000...1250E4CM230C



OTM1600E2CM230V



OTM1600E4CM230C



OTM2000...2500E3CM230C



OTM2000...2500E4CM230C

Motorized change-over switches, open transition, OTM630...OTM3200_CM
Delivered with a handle for manual operation, bolt kit with nut and washers for all terminals and male connectors for control circuits. Types OTM630...3200E_ include a storage clip for the handle and spare fuses.

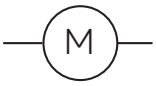

230VAC

No. of poles	Rated current [1] AC-21A, AC-22A ≤ 415V, I	Rated power 400V S	Rated current AC-31B/ AC-33B 415V, I	Type	Order code	Weight/ unit
	A	kVA	A			kg
Motor voltage U_e 220...240 V AC [2]						
2	630	435	650/650	OTM630E2CM230V	1SCA121268R1001	19
3	630	435	650/650	OTM630E3CM230C	1SCA103567R1001	22
4	630	435	650/650	OTM630E4CM230C	1SCA022873R1990	25
2	800	550	720/650	OTM800E2CM230V	1SCA121270R1001	19
3	800	550	720/650	OTM800E3CM230C	1SCA103570R1001	22
4	800	550	720/650	OTM800E4CM230C	1SCA022872R8340	25
2	1000	680	1000/1000	OTM1000E2CM230V	1SCA121279R1001	45
3	1000	680	1000/1000	OTM1000E3CM230C	1SCA112677R1001	55
4	1000	680	1000/1000	OTM1000E4CM230C	1SCA112703R1001	65
2	1250	850	1250/1000	OTM1250E2CM230V	1SCA121293R1001	45
3	1250	850	1250/1000	OTM1250E3CM230C	1SCA112676R1001	55
4	1250	850	1250/1000	OTM1250E4CM230C	1SCA112702R1001	65
2	1600	1000	1600/1000	OTM1600E2CM230V	1SCA121280R1001	49
3	1600	1000	1600/1000	OTM1600E3CM230C	1SCA112678R1001	59
4	1600	1000	1600/1000	OTM1600E4CM230C	1SCA112704R1001	69
2	2000	1350	-	OTM2000E2CM230V	1SCA121289R1001	61
3	2000	1350	-	OTM2000E3CM230C	1SCA112709R1001	78
4	2000	1350	-	OTM2000E4CM230C	1SCA112712R1001	95
2	2500	1700	-	OTM2500E2CM230V	1SCA121291R1001	61
3	2500	1700	-	OTM2500E3CM230C	1SCA112710R1001	78
4	2500	1700	-	OTM2500E4CM230C	1SCA112713R1001	95
3	3200	-	-	OTM3200E3CM230C	1SCA129240R1001	83
4	3200	-	-	OTM3200E4CM230C	1SCA129242R1001	101

[1] OTM2000...3200: Category AC-21B
[2] 2-pole versions, motor voltage Ue 220...240V AC/DC

Handles and bolt kits included as standard

Suitable for switches	Handle	Bolt kit
OTM630...800	OTV800ECMK	M12x40
OTM1000...2500	OTV1000ECMK	M12x60

Recommended accessories: Bridging bars and voltage sensing connectors

See pages 65-66

Motorized change-over switches

Ordering information for OTM160...OTM2500_CM



OTM160...250E3CM110V



OTM160...250E4WCM110V



OTM315...400E3CM110V



OTM630...800E4CM110V



OTM1000...1250E4CM110V



OTM1600E3CM230C



OTM2000...2500E4CM110V

Motorized change-over switches, open transition, OTM160...OTM2500_CM
Delivered with a handle for manual operation, bolt kit with nut and washers for all terminals and male connectors for control circuits. Types OTM160...2500E_ include a storage clip for the handle and spare fuses. Types OTM160...250E_W are equipped with extended phase distance.



110VAC/DC

No. of poles	Rated current [1] AC-21A, AC-22A ≤ 415V, I	Rated power 400V S	Rated current AC-31B/ AC-33B 415V, I	Type	Order code	Weight/ unit
	A	kVA	A			kg
Motor voltage U_e 110...125 V AC/DC						
3	160	110	160/160	OTM160E3CM110V	1SCA022845R8530	6.6
3	160	110	160/160	OTM160E3WCM110V	1SCA022846R3450	6.9
4	160	110	160/160	OTM160E4CM110V	1SCA022846R1080	7.5
4	160	110	160/160	OTM160E4WCM110V	1SCA022846R7360	7.9
3	200	135	200/200	OTM200E3CM110V	1SCA022845R8880	6.6
3	200	135	200/200	OTM200E3WCM110V	1SCA022846R3880	6.9
4	200	135	200/200	OTM200E4CM110V	1SCA022846R1410	7.5
4	200	135	200/200	OTM200E4WCM110V	1SCA022846R7790	7.9
3	250	170	250/250	OTM250E3CM110V	1SCA022845R9180	6.6
3	250	170	250/250	OTM250E3WCM110V	1SCA022846R4690	6.9
4	250	170	250/250	OTM250E4CM110V	1SCA022846R1830	7.5
4	250	170	250/250	OTM250E4WCM110V	1SCA022846R8170	7.9
3	315	215	315/315	OTM315E3CM110V	1SCA022847R1120	11.1
4	315	215	315/315	OTM315E4CM110V	1SCA022847R2790	12.5
3	400	275	400/400	OTM400E3CM110V	1SCA022847R1550	11.1
4	400	275	400/400	OTM400E4CM110V	1SCA022847R3170	12.5
3	630	435	650/650	OTM630E3CM110V	1SCA022873R1050	22
4	630	435	650/650	OTM630E4CM110V	1SCA022873R1810	25
3	800	550	720/650	OTM800E3CM110V	1SCA022872R5750	22
4	800	550	720/650	OTM800E4CM110V	1SCA022872R8260	25
3	1000	680	1000/1000	OTM1000E3CM110V	1SCA113653R1001	55
4	1000	680	1000/1000	OTM1000E4CM110V	1SCA113656R1001	65
3	1250	850	1250/1000	OTM1250E3CM110V	1SCA113652R1001	55
4	1250	850	1250/1000	OTM1250E4CM110V	1SCA113655R1001	65
3	1600	1000	1600/1000	OTM1600E3CM110V	1SCA113654R1001	59
4	1600	1000	1600/1000	OTM1600E4CM110V	1SCA113657R1001	69
3	2000	1350	-	OTM2000E3CM110V	1SCA113683R1001	78
4	2000	1350	-	OTM2000E4CM110V	1SCA113685R1001	95
3	2500	1700	-	OTM2500E3CM110V	1SCA113684R1001	78
4	2500	1700	-	OTM2500E4CM110V	1SCA113686R1001	95

[1] OTM2000...2500: Category AC-21B

Handles and bolt kits included as standard

Suitable for switches	Handle	Bolt kit
OTM160...250	OTV250ECMK	M8x25
OTM315...400	OTV400ECMK	M10x30
OTM630...800	OTV800ECMK	M12x40
OTM1000...2500	OTV1000ECMK	M12x60

Recommended accessories: Bridging bars and voltage sensing connectors

See pages 65-66

Motorized change-over switches

Ordering information for OTM160...OTM250_CM



OTM160...250E3CM48D



OTM160...250E4WCM48D

Motorized change-over switches, open transition, OTM160...OTM250_C
Delivered with a handle for manual operation, bolt kit with nut and washers for all terminals and male connectors for control circuits. Types OTM160...250E_ include a storage clip for the handle and spare fuses. Types OTM160...250E_W are equipped with extended phase distance.



48VDC

No. of poles	Rated current [1] AC-21A, AC-22A ≤ 415V, I	Rated power 400V S	Rated current AC-31B/ AC-33B 415V, I	Type	Order code	Weight/ unit
	A	kVA	A			kg
Motor voltage U_e 48 V DC						
3	160	110	160/160	OTM160E3CM48D	1SCA022845R8450	6.6
3	160	110	160/160	OTM160E3WCM48D	1SCA022846R3370	6.9
4	160	110	160/160	OTM160E4CM48D	1SCA022846R0940	7.5
4	160	110	160/160	OTM160E4WCM48D	1SCA022846R7280	7.9
3	200	135	200/200	OTM200E3CM48D	1SCA022845R8700	6.6
3	200	135	200/200	OTM200E3WCM48D	1SCA022846R3700	6.9
4	200	135	200/200	OTM200E4CM48D	1SCA022846R1320	7.5
4	200	135	200/200	OTM200E4WCM48D	1SCA022846R7610	7.9
3	250	170	250/250	OTM250E3CM48D	1SCA022845R9000	6.6
3	250	170	250/250	OTM250E3WCM48D	1SCA022846R4510	6.9
4	250	170	250/250	OTM250E4CM48D	1SCA022846R1750	7.5
4	250	170	250/250	OTM250E4WCM48D	1SCA022846R8090	7.9

Handles and bolt kits included as standard

Suitable for switches	Handle	Bolt kit
OTM160...250	OTV250ECMK	M8x25

Recommended accessories: Bridging bars and voltage sensing connectors

See pages 65-66

Motorized change-over switches

Ordering information for OTM160...OTM2500_CM



OTM160...250E3CM24D



OTM160...250E4WCM24D



OTM315...400E4CM24D



OTM630...800E3CM24D



OTM1000...1250E4CM24D



OTM1600E3CM24D



OTM2000...2500E4CM24D

Motorized change-over switches, open transition, OTM160...OTM2500_C

Delivered with a handle for manual operation, bolt kit with nut and washers for all terminals and male connectors for control circuits. Types OTM160...2500E_ include a storage clip for the handle and spare fuses. Types OTM160...250E_W are equipped with extended phase distance.



24VDC

No. of poles	Rated current [1] AC-21A, AC-22A ≤ 415V, I	Rated power 400V S	Rated current AC-31B/ AC-33B 415V, I	Type	Order code	Weight/ unit
	A	kVA	A			kg
Motor voltage U_e 24 V DC						
3	160	110	160/160	OTM160E3CM24D	1SCA022845R8110	6.6
3	160	110	160/160	OTM160E3WCM24D	1SCA022846R3290	6.9
4	160	110	160/160	OTM160E4CM24D	1SCA022846R0860	7.5
4	160	110	160/160	OTM160E4WCM24D	1SCA022846R7100	7.9
3	200	135	200/200	OTM200E3CM24D	1SCA022845R8290	6.6
3	200	135	200/200	OTM200E3WCM24D	1SCA022846R3610	6.9
4	200	135	200/200	OTM200E4CM24D	1SCA022846R1240	7.5
4	200	135	200/200	OTM200E4WCM24D	1SCA022846R7520	7.9
3	250	170	250/250	OTM250E3CM24D	1SCA022845R8370	6.6
3	250	170	250/250	OTM250E3WCM24D	1SCA022846R4420	6.9
4	250	170	250/250	OTM250E4CM24D	1SCA022846R1670	7.5
4	250	170	250/250	OTM250E4WCM24D	1SCA022846R7950	7.9
3	315	215	315/315	OTM315E3CM24D	1SCA022847R0910	11.1
4	315	215	315/315	OTM315E4CM24D	1SCA022847R2520	12.5
3	400	275	400/400	OTM400E3CM24D	1SCA022847R1390	11.1
4	400	275	400/400	OTM400E4CM24D	1SCA022847R2950	12.5
3	630	435	650/650	OTM630E3CM24D	1SCA022873R1210	22
4	630	435	650/650	OTM630E4CM24D	1SCA022873R2020	25
3	800	550	720/650	OTM800E3CM24D	1SCA022872R5910	22
4	800	550	720/650	OTM800E4CM24D	1SCA022872R8420	25
3	1000	680	1000/1000	OTM1000E3CM24D	1SCA113672R1001	55
4	1000	680	1000/1000	OTM1000E4CM24D	1SCA113675R1001	65
3	1250	850	1250/1000	OTM1250E3CM24D	1SCA113671R1001	55
4	1250	850	1250/1000	OTM1250E4CM24D	1SCA113674R1001	65
3	1600	1000	1600/1000	OTM1600E3CM24D	1SCA113673R1001	59
4	1600	1000	1600/1000	OTM1600E4CM24D	1SCA113676R1001	69
3	2000	1350	-	OTM2000E3CM24D	1SCA113695R1001	78
4	2000	1350	-	OTM2000E4CM24D	1SCA113697R1001	95
3	2500	1700	-	OTM2500E3CM24D	1SCA113696R1001	78
4	2500	1700	-	OTM2500E4CM24D	1SCA113698R1001	95

[1] OTM2000...2500: Category AC-21B

Handles and bolt kits included as standard

Suitable for switches	Handle	Bolt kit
OTM160...250	OTV250ECMK	M8x25
OTM315...400	OTV400ECMK	M10x30
OTM630...800	OTV800ECMK	M12x40
OTM1000...2500	OTV1000ECMK	M12x60

Recommended accessories: Bridging bars and voltage sensing connectors

See pages 65-66

Manual and motorized bypass switches

Ordering information for motorized OTM160…250E_YM_C



OTM160...250E3YM230C

Motorized bypass switches, open transition, OTM160...250E_YM_C
Included a manual direct handle, bolt set for the cable connection and storage clip for handle and spare fuses. Handle padlockable in the 0-position.

No. of poles	Rated current and power AC-21A...AC-22A AC-23A ≤ 415V I	400V S	400...415V I / P	Type	Order code	Weight/ unit
	A	kVA	kW			kg
Types -W: with wide phase distance.						
3	160	110	160/90	OTM160E3YM230C	1SCA141435R1001	7.72
4	160	110	160/90	OTM160E4YM230C	1SCA141436R1001	8.1
3	200	135	200/110	OTM200E3YM230C	1SCA141437R1001	7.72
4	200	135	200/110	OTM200E4YM230C	1SCA141438R1001	8.1
3	250	170	250/140	OTM250E3YM230C	1SCA141439R1001	7.72
4	250	170	250/140	OTM250E4YM230C	1SCA140870R1001	8.1



OTZC13

Recommended accessories: Bridging bars
Please note that two sets of bridging bars are required to make a complete connection.

Suitable for switches	No. of poles	Type	Order code	Units/ type	Weight/ unit
				pcs	kg
OT_160...250_C, _Y	3	OTZC13	1SCA022767R6910	3	0.6
OT_160...250_C, _Y	4	OTZC14	1SCA022767R7040	4	0.8

Recommended accessories: Phase barriers

Suitable for switches	No. of poles	Height	Cutting width of the phase barrier	Type	Order code	Units/ type
		mm	mm			pcs
OT_160...250E_C	3	100	55	PB100 low	1SDA054970R1	4
OT_160...250E_C	3	200	55	PB200 high	1SDA054972R1	4
OT_160...250E_C	4	100	55	PB100 low	1SDA054971R1	6
OT_160...250E_C	4	200	55	PB200 high	1SDA054973R1	6
OT_315...400E_C	3	100	67	PB100 low	1SDA054970R1	4
OT_315...400E_C	3	200	67	PB200 high	1SDA054972R1	4

Motorized change-over switches

Dimensional drawings

OTM40...125F3/4_CM

M00352/OTM30-125F_C_M A

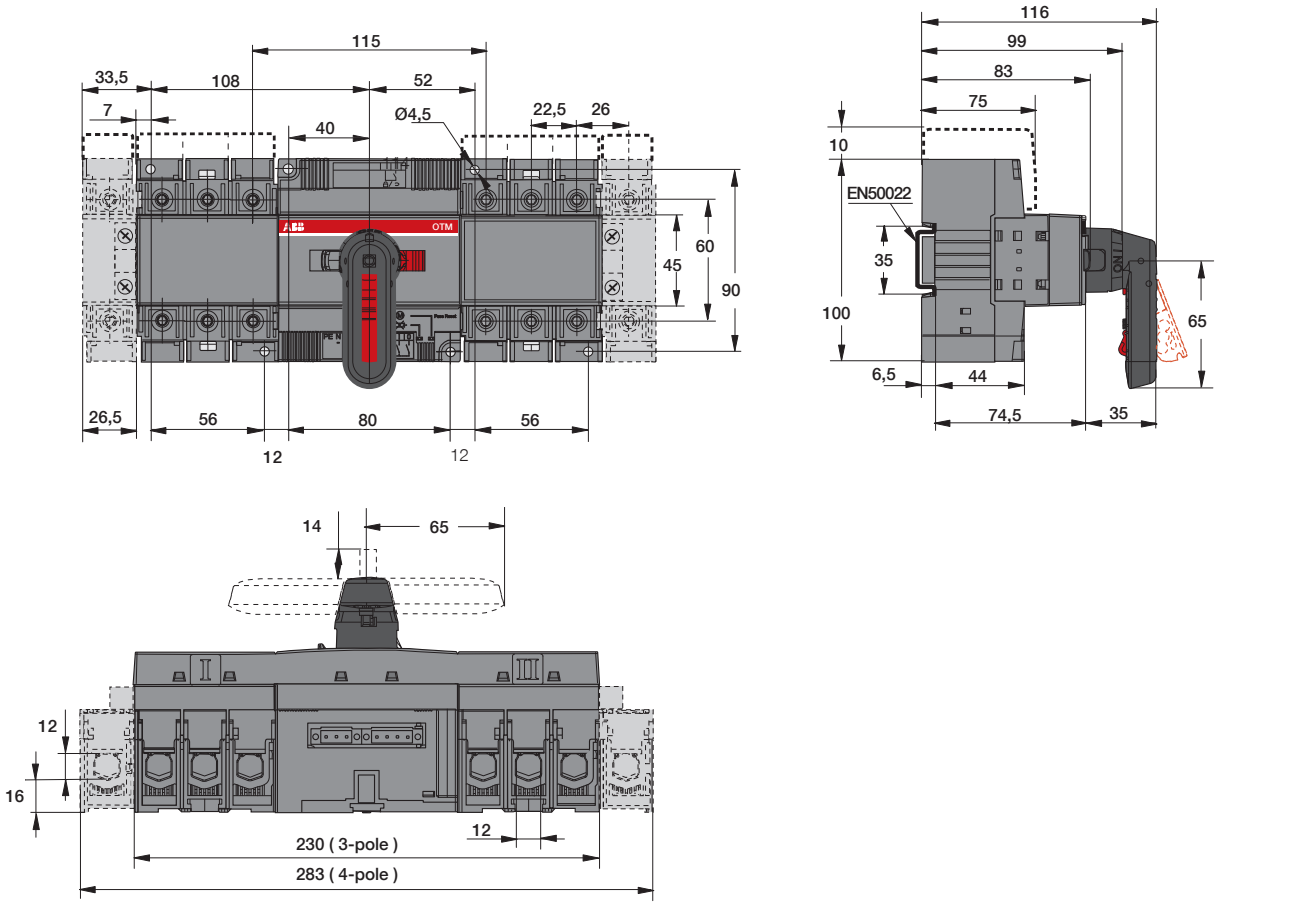

OTM160...250E2/3/4CM

OTM160-250_C_M

	E2	E3	E4
	mm	mm	mm
A	35	35	35
A1	116	116	116
A2	223	258	293
B	238	273	308

M00111 / OTM160-250E_C_M E

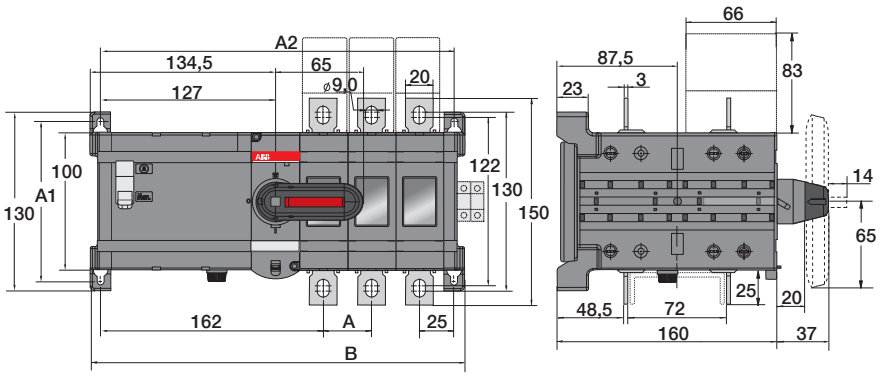

Main dimensions (mm)

Motorized change-over switches

Dimensional drawings

OTM16a0...250E2/3/4WCM

OTM160-250_WCM

	E2	E3	E4
	mm	mm	mm
A	43	43	43
A1	116	116	116
A2	239	282	325
B	254	297	340

M00115 / OTM160-250E_WC_M E

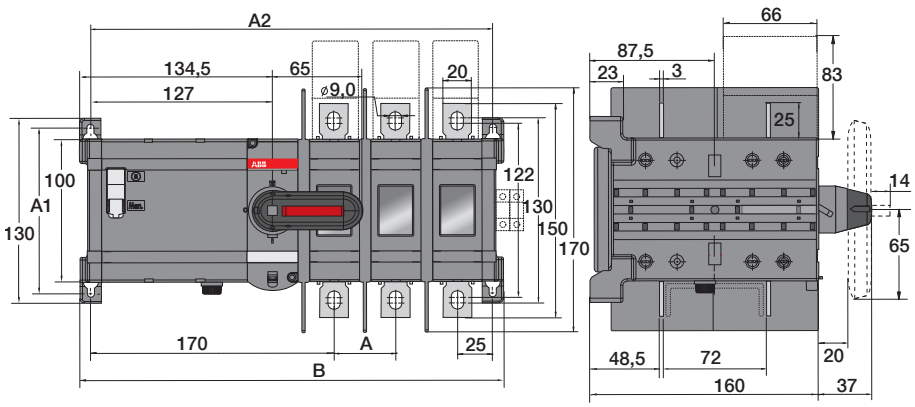

OTM315...400E2/3/4CM

OTM315-400_C_M

	E2	E3	E4
	mm	mm	mm
A	44	44	44
A1	142	142	142
A2	261	305	349
B	280	323	367

M00113 / OTM315-400E_C_M F

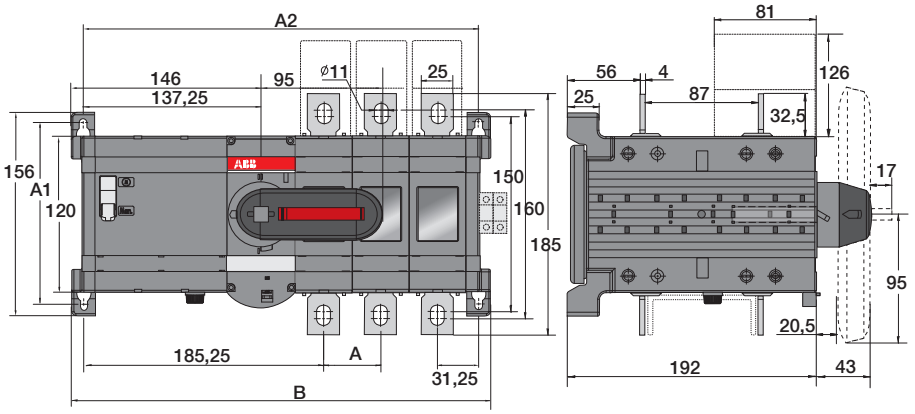

OTM630...800E2/3/4CM

OTM630-800E_C_M

	E2	E3	E4
	mm	mm	mm
A	65	65	65
A1	180	180	180
A2	325	390	455
B	346	411	476

M00140 / OTM630-800E02-04C_M C

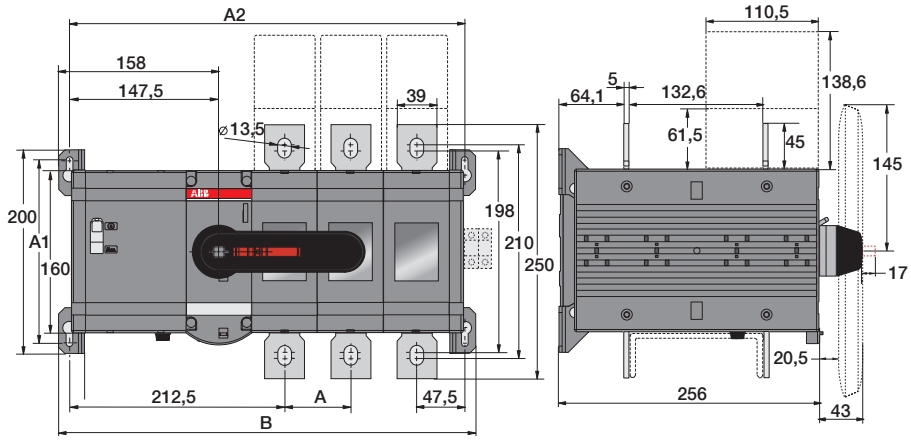

Main dimensions (mm)

Motorized change-over switches

Dimensional drawings

OTM1000...1250E2/3/4CM

OTM1000-1250_C_M

	E2	E3	E4
	mm	mm	mm
A	80	80	80
A1	230	230	230
A2	296.5	476.5	556.5
B	426.5	506.5	586.5

M00256 / OTM1000-1250E_C_M C

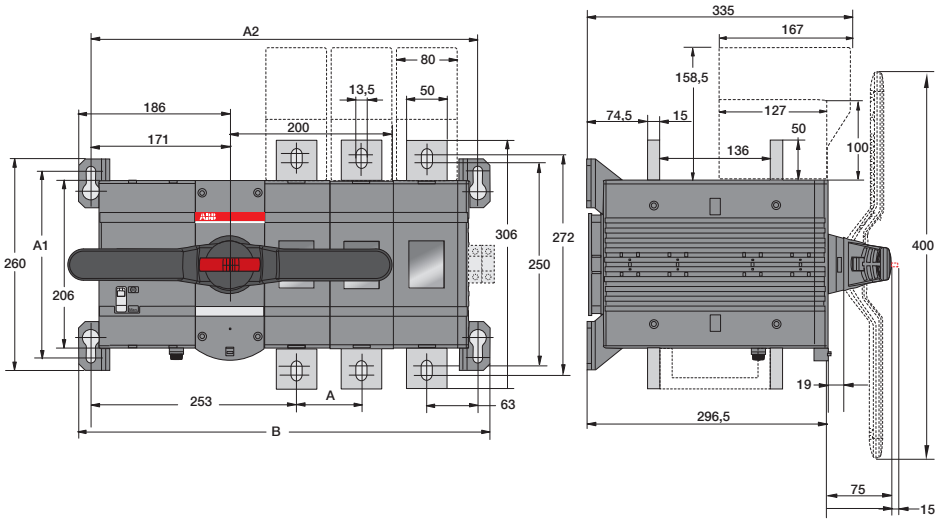

OTM1600E2/3/4CM

OTM1600_C_M

	E2	E3	E4
	mm	mm	mm
A	80	80	80
A1	230	230	230
A2	396.6	476.5	556.5
B	426.5	506.5	586.5

M00258 / OTM1600E_C_M C

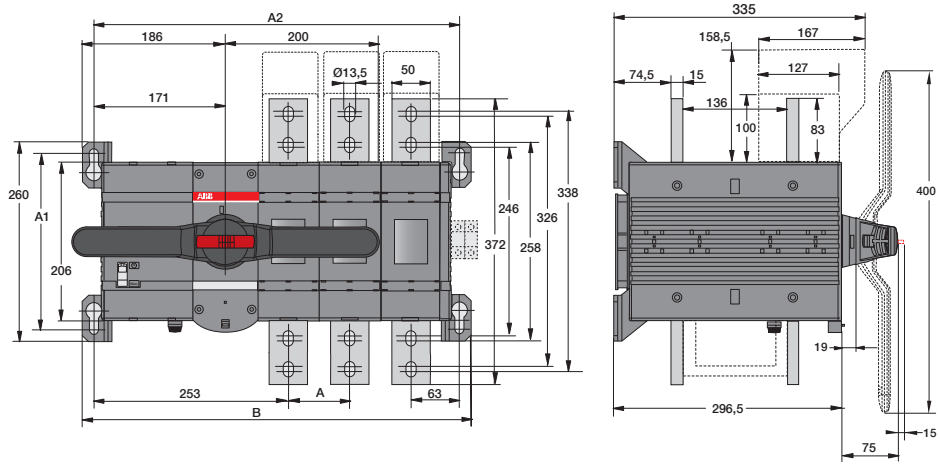

Motorized change-over switches

Dimensional drawings

OTM2000...2500E3/4CM

OTM2000-2500_C_M

	E2	E3	E4
	mm	mm	mm
A	126	126	126
A1	230	230	230
A2	488.5	614.5	740.5
B	518.5	644.5	770.5

M00259 / OTM2000-2500E_C_M C

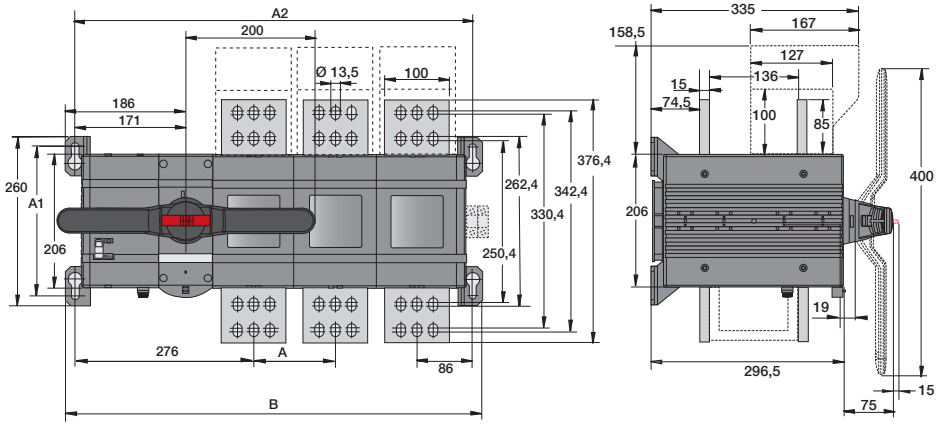

OT3200E2/3/4CM

OTM3200_C_M

	E2	E3	E4
	mm	mm	mm
A	140	140	140
A1	250	250	250
A2	521.5	661.5	801.5
B	551.5	691.5	831.5

M00432/OTM3200-4000_C_M A

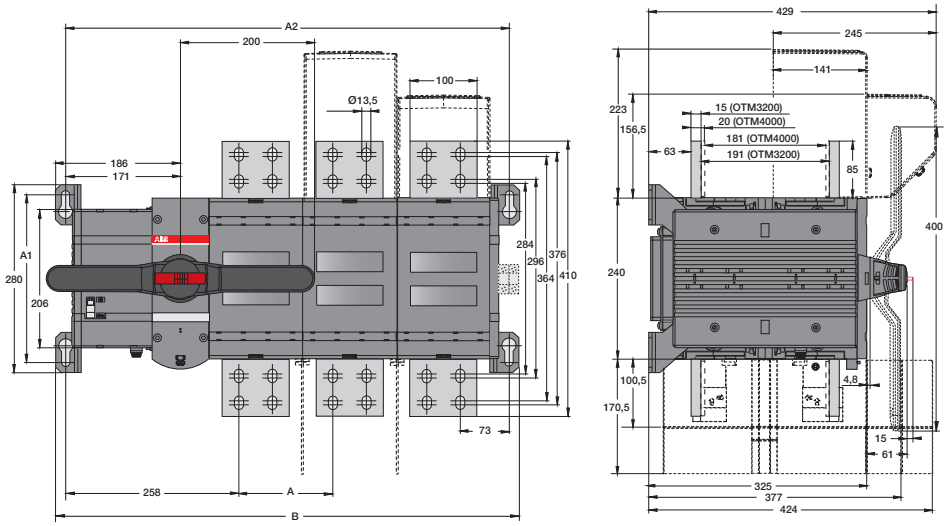

Main dimensions (mm)

Manual and motorized bypass switches

Dimensional drawings for manual bypass switches

OT160...250E03/04Y

OT160...250_Y_

	E03	E04
	mm	mm
A	35	35
A1	118	118
A2	172	207
B	194	229

M00405 / OT160-250E02-04Y A

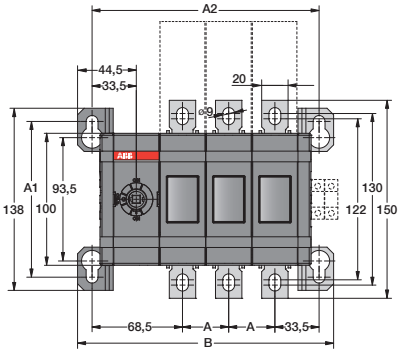

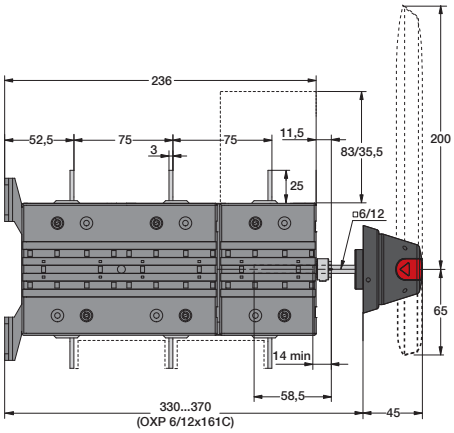

OT315...400E03/04Y

OT315...400E_Y

	E03	E04
	mm	mm
A1	136	136
A2	218	262
B	240	284

M00409 / OT315-400E02-04Y B/E

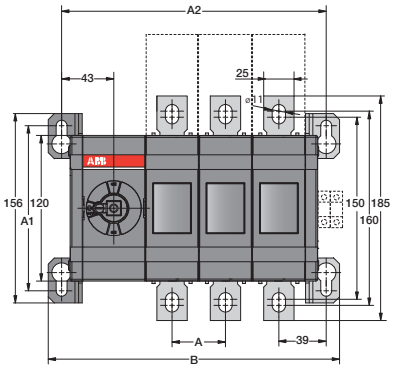

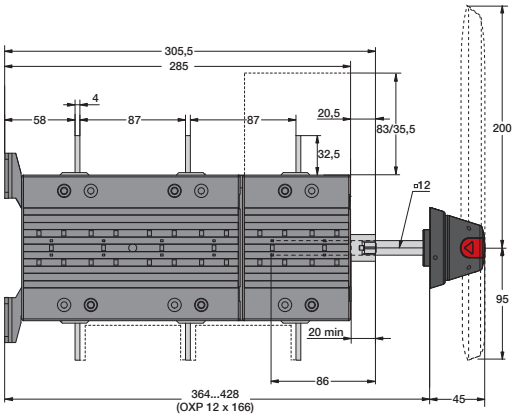

OT630...800E03/04Y

OT630...800E_Y

	E03	E04
	mm	mm
A1	180	180
A2	294	359
B	315	380

M00397 / OT630-800E02-04Y B /ES

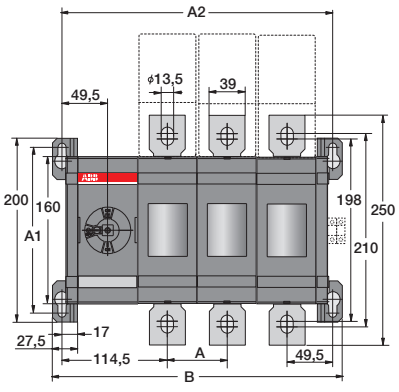

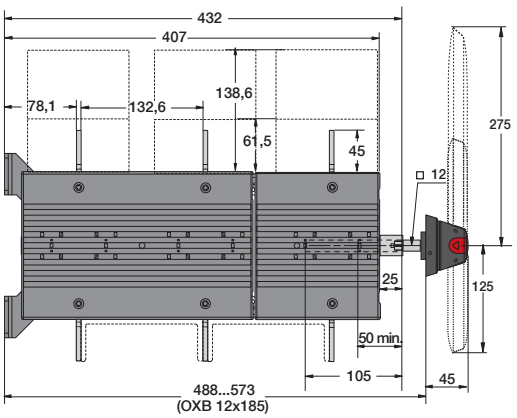

Main dimensions (mm)

Manual and motorized bypass switches

Dimensional drawings motorized bypass switches

OTM160...250E03-04Y

OTM160...250_Y

	E2	E3	E4
	mm/In	mm/In	mm/In
A	35	35	35
A1	118	118	118
A2	239	274	309
B	251	296	331

M00339 / OTM160-250E2-4Y A

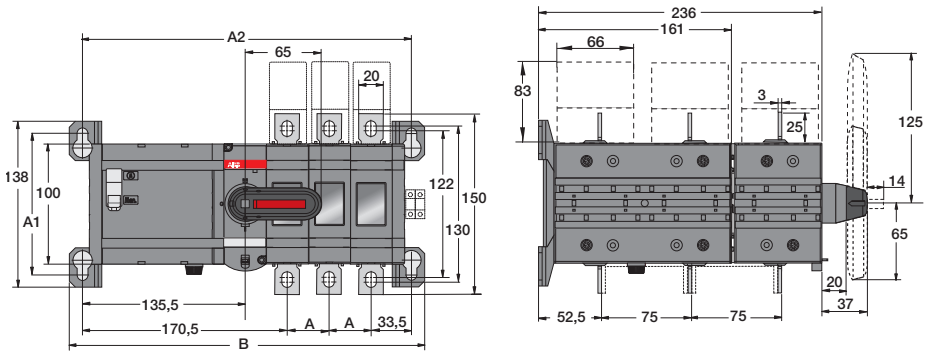

Main dimensions (mm)

Optional accessories for motorized change-over switches

Ordering information for handles and storage clips



OTV400ECMK

Plastic handle, direct mounting, indication I-O-II
Includes a shaft and a mechanism cover. The type and ordering numbers are for one piece.

Suitable for switches	Colour	Type	Order code	Delivery batch	Weight/ unit
				pcs	kg
Padlockable with three padlocks in 0-position. Types -ECMK include also microswitches.					
OTM160...250_C	Black	OTV250ECMK	1SCA022804R0570	1	0.10
OTM315...400_C	Black	OTV400ECMK	1SCA022843R2900	1	0.28
OTM630...800_C	Black	OTV800ECMK	1SCA022804R3410	1	0.32
OTM1000...2500_C	Black	OTV1000ECMK	1SCA111301R1001	1	0.77



OTVS0



OTVS1

Handle and spare fuse storage clip for motorized change-over switches
OTM40...125F_, the handle can be stored in the handle storage clip OTVS0. The clip can be fixed to a panel frame using the included adhesive tape. OTM160...3200E_, the handle and two spare fuses can be stored in the OTVS1 and OTVS2. OTVS1 and OTVS2 can be installed onto the left side of the switch. Snap-on mounting, no tools required. On OTM160...3200E_, the size of the handle prevents the installation onto the switch frame. However, the handle clip can be installed separately onto the panel frame and the fuse holder clip onto the switch frame.

Suitable for switches	Type	Order code	Units/ type	Weight/ unit
			pcs	kg
OTM40...125F	OTVS0	1SCA117524R1001	1	0.02
OTM160...250E_	OTVS1	1SCA111413R1001	1	0.02
OTM315...3200E_	OTVS2	1SCA111414R1001	1	0.04

Optional accessories for manual and motorized bypass switches

Ordering information for external handles



OHBZX200



OHBZX275

Handle extension for bypass switches, plastic
The handle extension is snap-on mounted on the standard handle for manual operation. The handle extension shall be removed when padlocking the standard handle. Units / type = 1 pcs.

Suitable for switches	Colour	Type	Order code	Delivery batch	Weight/ unit
				pcs	kg
OT160...400E_Y	Black	OHBZX200	1SCA125960R1001	1	0.12
OT630...800E_Y	Black	OHBZX275	1SCA125963R1001	1	0.12

Optional accessories for motorized change-over switches

Ordering information for terminal shrouds

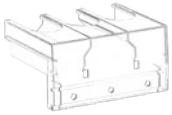

OTS_T3



OTS_T1



OTS_L_



OTS_S_

Terminal shrouds, grey plastic

Snap-on mounting to the switches, IP20. A kit includes three or four shrouds which can be used on either side of the switch. Suitable for the upperswitch. Transparent shrouds for OTM160...3200 available on request, please replace the letter "G" with "T".

Suitable for switches	No. of poles	Description	Type	Order code	Units/ type	Weight/ unit
					pcs	kg
OTM40...125F_			OTS125T3	1SCA022379R9680	10	0.01
OT_160...250_C	3	Long type	OTS250G1L/3	1SCA022731R8150	3	0.09
OT_160...250_C	3	Short type	OTS250G1S/3	1SCA022731R8310	3	0.06
OT_160...250_C	4	Long type	OTS250G1L/4	1SCA022731R8230	4	0.12
OT_160...250_C	4	Short type	OTS250G1S/4	1SCA022731R8400	4	0.08
OT_315...400_C	3	Long type	OTS400G1L/3	1SCA022736R8840	3	0.15
OT_315...400_C	3	Short type	OTS400G1S/3	1SCA022736R9060	3	0.09
OT_315...400_C	4	Long type	OTS400G1L/4	1SCA022736R9490	4	0.20
OT_315...400_C	4	Short type	OTS400G1S/4	1SCA022736R9650	4	0.12
OT_600...800_C	3	Long type	OTS800G1L/3	1SCA022776R7890	3	0.32
OT_600...800_C	3	Short type	OTS800G1S/3	1SCA022776R8190	3	0.17
OT_600...800_C	4	Long type	OTS800G1L/4	1SCA022776R7970	4	0.42
OT_600...800_C	4	Short type	OTS800G1S/4	1SCA022776R8270	4	0.26
OT_1000...1600_C	3	Long type	OTS1600G1L/3	1SCA022871R9510	3	0.64
OT_1000...1600_C	3	Short type	OTS1600G1S/3	1SCA022871R9600	3	0.37
OT_1000...1600_C	4	Long type	OTS1600G1L/4	1SCA022871R9780	4	0.85
OT_1000...1600_C	4	Short type	OTS1600G1S/4	1SCA022871R9860	4	0.49
OT_2000...2500_C	3	Long type	OTS2500G1L/3	1SCA107261R1001	3	0.77
OT_2000...2500_C	3	Short type	OTS2500G1S/3	1SCA107260R1001	3	0.47
OT_2000...2500_C	4	Long type	OTS2500G1L/4	1SCA107262R1001	4	1.00
OT_2000...2500_C	4	Short type	OTS2500G1S/4	1SCA107271R1001	4	0.61
OT3200_C	3	Long type	OTS4000G1L/3	1SCA129042R1001	3	1.20
OT3200_C	3	Short type	OTS4000G1S/3	1SCA129044R1001	3	1.00
OT3200_C	4	Long type	OTS4000G1L/4	1SCA129043R1001	4	1.40
OT3200_C	4	Short type	OTS4000G1S/4	1SCA129045R1001	4	1.60

Optional accessories for motorized change-over switches

Ordering information for phase barriers



OTB_

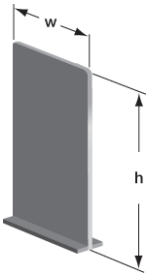

PB_

Phase barriers

The phase barriers designed for ABB Tmax T4-T5 MCCB's can also be used for OT_160...800 change-over switches. 3-pole change-overs need 8 barriers and 4-pole change-overs need 12 barriers for full protection.

Suitable for switches	No. of poles	Height mm	Cutting width of the phase barrier mm	Type	Order code	Units/ type pcs
OT_160...250E_C	3	100	55	PB100 low	1SDA054970R1	4
OT_160...250E_C	3	200	55	PB200 high	1SDA054972R1	4
OT_160...250E_C	4	100	55	PB100 low	1SDA054971R1	6
OT_160...250E_C	4	200	55	PB200 high	1SDA054973R1	6
OT_315...400E_C	3	100	67	PB100 low	1SDA054970R1	4
OT_315...400E_C	3	200	67	PB200 high	1SDA054972R1	4
OT_315...400E_C	4	100	67	PB100 low	1SDA054971R1	6
OT_315...400E_C	4	200	67	PB200 high	1SDA054973R1	6
OT_600...800E_C	3	100	90	PB100 low	1SDA054970R1	4
OT_600...800E_C	3	200	90	PB200 high	1SDA054972R1	4
OT_600...800E_C	4	100	90	PB100 low	1SDA054971R1	6
OT_600...800E_C	4	200	90	PB200 high	1SDA054973R1	6

Ordering information for terminal clamps



OZXT1



OZXT2...3



OZXT6

Terminal clamp sets for Al- and Cu-cables insulated versions

Suitable for switches	Cable cross section mm²	Type	Order code	Units/ type pcs	Weight/ unit kg
OTM40...125F_	16...50 Al/2.5...50 Cu	OZXT1	1SCA022469R6310	3	0.06
OTM63...125F_	16...120 Al/Cu	OZXT2	1SCA022620R7200	3	0.21
OTM63...125F_	2x(16...50) Al/Cu	OZXT3	1SCA022639R0720	3	0.21
Including 0.75...2.5 mm² voltage sensing connection. Voltage sensing wires are not included					
OTM40...125F_	16...50 Al/2.5...50 Cu	OZXT6	1SCA122537R1001	3	0.06

Optional accessories for motorized change-over switches

Ordering information for bridging- and reversing bars



OTZC13...34



OTZC43...44
OTZC53...54

Bridging bars

The bridging bars provide a connection link either on the incoming or outcoming side of the switch.

Suitable for switches	No. of poles	Type	Order code	Units/ type	Weight/ unit
				pcs	kg
OT_160...250_C	3	OTZC13	1SCA022767R6910	3	0.6
OT_160...250_C	4	OTZC14	1SCA022767R7040	4	0.8
OT_315...400_C	3	OTZC23	1SCA022767R7120	3	0.6
OT_315...400_C	4	OTZC24	1SCA022767R7210	4	0.8
OT_600_C...800E_C	3	OTZC33	1SCA022785R7020	3	1.0
OT_600_C...800E_C	4	OTZC34	1SCA022785R7110	4	1.3
OT_1000...1250E_C	3	OTZC43	1SCA022868R0710	3	4.2
OT_1000...1250E_C	4	OTZC44	1SCA022868R0800	4	5.6
OT800U_, OT_1600E_C	3	OTZC53	1SCA022868R0980	3	5.6
OT800U_, OT_1600E_C	4	OTZC54	1SCA022868R1010	4	7.4
OT_2000...2500E_C	3	OTZC63	1SCA022868R1100	3	10.8
OT_2000...2500E_C	4	OTZC64	1SCA022868R1360	4	14.5
OT_3200E_C	3	OTZC73	1SCA128843R1001	3	14.1
OT_3200E_C	4	OTZC74	1SCA128844R1001	4	18.7

Correct mounting of bridging bars onto the switch shown here.





OTZR_

Reversing bars

A reversing switch can be built by using phase sequence bars in two phases.
The kit includes two phase sequence conversion bars. The missing bridging bars must be ordered separately, see above. For example 3-pole switches: one 4-pole standard bridging bar kit is required (one bar for the reversing side, three bars for the other side).

Suitable for switches	Type	Order code	Units/ type	Weight/ unit
			pcs	kg
OT_160...250_C	OTZR1	1SCA100352R1001	2	0.3
OT_315...400_C	OTZR2	1SCA104647R1001	2	0.3
OT_600_C...800E_C	OTZR3	1SCA100355R1001	2	0.4

Optional accessories for motorized change-over switches

Ordering information for voltage sensing connector



OMZB18...28



OMZB38



OMZB18...28



OMZB48

Voltage sensing connectors*

For 0.5...1.5mm² voltage sensing connection of the top or bottom power poles. The connector package includes also the faston terminals (see the picture). One package includes 8 connectors and 8 faston terminals. Wires are not included.

Suitable for switches	Faston terminal cable cross section mm²	Type	Order code	Units/ type pcs	Weight/ unit kg
OT_160...250_C	0.5...1.5	OMZB18	1SCA120153R1001	8	0.2
OT_315...400_C	0.5...1.5	OMZB28	1SCA120154R1001	8	0.2
OT_630...800E_C	0.5...1.5	OMZB38	1SCA120155R1001	8	0.2
OT_1000...3200_C	0.5...1.5	OMZB48	1SCA120156R1001	8	0.2

* Terminal clamp OZXT6 is recommended to use with OTM40...125_C for voltage sensing connection.
Terminal clamp OZXT6 includes 0.75...2.5 mm² voltage sensing connection. See ordering information on page 57.

Correct mounting of voltage sensing connectors onto the switch shown here.

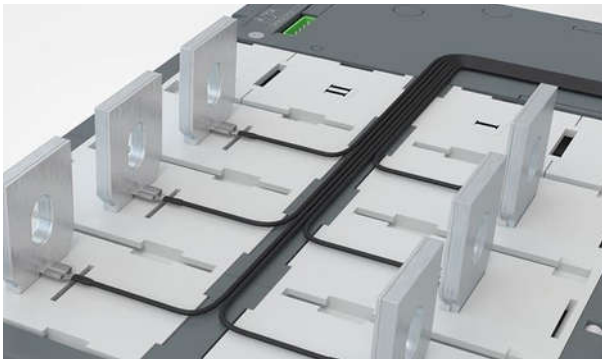

Ordering information for parallel connection kits



OMZC_

Parallel connection kits

Finger protected connection bars for parallel connection of the upper or lower terminals. The bars accept additional cables, the maximum size is stated below.

Suitable for switches	Cable cross section mm²	Type	Order code	Units/ type pcs	Weight/ unit kg
OTM40F3C_	2.5...25/2x2.5...16	OMZC003	1SCA121324R1001	1	0.5
OTM40F4C_	2.5...25/2x2.5...16	OMZC004	1SCA121325R1001	1	0.65
OTM40...125F3C_	10...70	OMZC03	1SCA117037R1001	1	0.5
OTM40...125F4C_	10...70	OMZC04	1SCA117038R1001	1	0.65

Optional accessories for motorized change-over switches

Ordering information and technical data for auxiliary contacts



OA1G01
OA7G10



OA1G10
OA8G01



OA2G11

Auxiliary contact blocks for OTM40...125F

Snap-on mounting to the switch, IP20, max. 2 blocks/ side. Ith = 16 A, suitable for cable cross sections max. 2 x 2.5 mm². Simultaneous action with the main contacts.

Suitable for switches	Contact functions	Installation side	Type	Order code	Delivery batch	Weight/ unit
					pcs	kg
OT_16...125F_C	1NO	Right	OA1G10	1SCA022353R4970	10	0.03
OT_16...125F_C	1NC	Right	OA8G01	1SCA022744R2240	10	0.03
OT_16...125F_C	1NO	Left	OA7G10	1SCA022673R1140	10	0.03
OT_16...125F_C	1NC	Left	OA1G01	1SCA022353R4890	10	0.03
OT63...125F3C	1NO+1NC	Either	OA2G11 [1]	1SCA022379R8100	10	0.03

[1] Not mountable on 4-pole change-over switches

Auxiliary contact blocks for OTM160...3200

Mounting on the right side of the switch: Max. 4 auxiliary contact blocks/switch (totally 8 blocks). Types _AU have gold plated contacts for harsh environments and low operating voltages. Simultaneous action with the main contacts, IP20.

Suitable for switches	Contact functions	Installation side	Type	Order code	Delivery batch	Weight/ unit
					pcs	kg
OT_160...3200_	1NO	Right	OA1G10	1SCA022353R4970	10	0.03
OT_160...3200_	1NC	Right	OA3G01	1SCA022456R7410	10	0.03
OT_160...3200_	1NO	Right	OA1G10AU	1SCA022436R7910	10	0.03
OT_160...3200_	1NC	Right	OA3G01AU	1SCA022819R5260	10	0.03

Auxiliary contacts

Technical data for auxiliary contacts according to IEC 60947-5-1, for OA1G_, OA2G_, OA3G_, OA7G_, OA8G_

AC15			DC12		DC13	
Ue	Ie	Ue	Ie	P	Ie	P
V	A	V	A	W	A	W
230	6	24	10	240	2	50
400	4	72	4	290	0.8	60
415	4	125	2	250	0.55	70
690	2	250	0.55	140	0.27	70
-	-	440	0.1	44	-	-

Function tables

Function table of OT160...3200, OT160...800_Y and OTM160...2500 auxiliary contacts / Switch I (max. 2+2)

Handle position	Main contacts	OA1G10 NO	OA3G01 NC
I	closed	closed	open
0	open	open	closed
II	closed	open	closed

Function table of OT160...3200, OT160...800_Y and OTM160...2500 auxiliary contacts / Switch II (max. 2+2)

Handle position	Main contacts	OA1G10 NO	OA3G01 NC
I	closed	open	closed
0	open	open	closed
II	closed	closed	open

Optional accessories for motorized change-over switches

Ordering information for automatic control units and related accessories



OMD300



OMD800

Automatic control units
OMD automatic control units can be used with OTM40...3200 motorized change-over switches in order to assemble an automatic transfer switch. The type and ordering codes include the OMD control unit, PCB connectors and 2 OMZD1 fasteners for door mounting.

If used with OTM40...125_CMA_:
1 x OTM40...125_CMA_ motorized change-over switch and 2 or 3 x OZXT6 terminal clamp sets (including voltage sensing connection) must be ordered separately to be able to assemble an automatic transfer switch.

If used with OTM160...3200_CM_:
1 x OTM160...3200_CM_ motorized change-over switch, 1 x OMZB_ voltage sensing connectors and 2 x OA1G10 auxiliary contacts must be ordered separately to be able to assemble an automatic transfer switch. The control unit can be mounted on a door or on DIN rail.

Suitable for switches	Type	Order code	Units/ type	Weight/ unit
			pcs	kg
OTM40...3200_CM_	OMD300E480C-A1	1SCA123790R1001	1	1.0
OTM40...3200_CM_	OMD800E480C-A1	1SCA123791R1001	1	1.3



OMZD1

Panel fasteners
For mounting the OMD automatic control unit on the door. The type and ordering code is for 1 piece, so 2 units must be ordered for mounting the control on the door.

Suitable for OMD control unit	Type	Order code	Units/type
			pcs
OMD300_, OMD800_	OMZD1	1SCA022787R5190	1



OMZC2

Cover plate
Providing protection against accidental contact. Padlockable transparent cover. The type and ordering codes are for 1 piece.

Suitable for OMD control unit	Type	Order code	Units/type
			pcs
OMD300_, OMD800_	OMZC2	1SCA101001R1001	1

Optional accessories for motorized change-over switches

Technical data and dimensional drawings for automatic control units

Technical data for automatic control units OMD300/800

OMD300		
Rated operational voltage U_e		208 V AC - 480 V AC +/- 20% + N
	Phase - Neutral	120 V AC - 277 V AC +/- 20%
Rated frequency		50 / 60 Hz +/- 10%
Voltage sensing precision		5%
Frequency sensing precision		1%
Relay ratings:	X21, X22 X23, X24 X26, X27, X28	12 A, AC1, 250 V / 12 A, DC1, 24 V 8 A, AC1, 250 V / 8 A, DC1, 24 V 10 A, AC1, 250 V / 5 A, DC1, 24 V
Rated impulse withstand voltage, U_{imp}		6 kV
Overvoltage category		III
Pollution degree		2
OMD800		
Rated operational voltage U_e on 3 phase system		100 V AC - 480 V AC +/- 20%
	Phase - Neutral	57.7 V AC - 277 V AC +/- 20%
Rated operational voltage U_e on 1 phase system [1)]		57.7 V AC - 277 V AC +/- 20%
Rated frequency		50 / 60 Hz +/- 10%
Voltage sensing precision		1%
Frequency sensing precision		1%
Relay ratings:	X21, X22, X24 X23 X29	12 A, AC1, 250 V / 12 A, DC1, 24 V 8 A, AC1, 250 V / 8 A, DC1, 24 V 5 A, AC1, 250 V / 6 A, DC1, 24 V
Rated impulse withstand voltage, U_{imp}		6 kV
Overvoltage category		III
Pollution degree		2
AUX voltage (1)		24 V DC - 110 V DC (-10% to +15%)
Protection rating for the front panel		IP40
Operating temperature		– 20...+ 60 °C
Transportation and storage temperature		– 25...+ 80 °C
Altitude		Max. 2000m
Humidity		
With condensation		5 %...98 %
Without condensation		5 %...90 %

[1)] If on 1 phase system the voltage level is between 57.7 – 109 V AC, AUX voltage supply must be used

OMD300/800

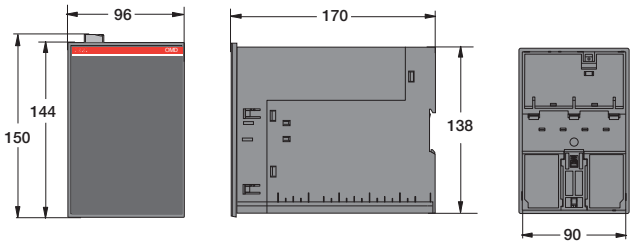

Main dimensions (mm)

Optional accessories for motorized change-over switches

Ordering information for dual power sources



ODPSE230C

Dual power source

Provides power supply to the motor operator by using two lines. The device has two inputs, from line I (LN I) and line II (LN II), and one output for the motor operator. The motor operator is automatically energized whenever power is available in one of the lines. Can be used with 230VAC motor operators. Snap-on mounted PCB connectors are included in the delivery. The device can be DIN-rail or screw mounted.

Suitable for switches	Type	Order code	Units/ type	Weight/ unit
			pcs	kg
OTM40...3200_	ODPSE230C	1SCA116892R1001	1	0.3

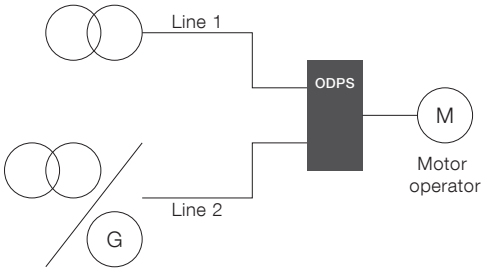

Connection diagram, ODPSE230C



ODPS230

Dual power source including ATS functionality

Similar to previous dual power source but also including ATS (Automatic Transfer Switch) functionality and in-built short-circuit protection. Provides power supply to the motor operator by using two 220...240 V AC lines. Motor operator is automatically energized whenever power is available in one of the lines. The device has a three position (AUTO-MAN-O) DIP switch to choose the correct operating mode. The AUTO position enables and the MAN position disables the ATS functionality when used with OTM motorized change-over switch. The O position is used for safety reasons: it operates the OTM to position 0 to isolate the load from the feeding sources. The device can be DIN-rail or screw mounted.

Suitable for switches	Type	Order code	Units/ type	Weight/ unit
			pcs	kg
OTM40...3200_	ODPS230	1SCA122946R1001	1	0.3

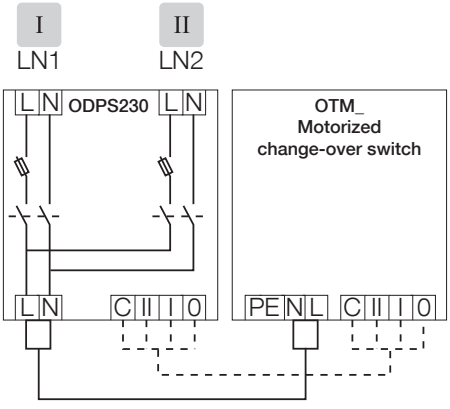

Connection diagram, ODPS230

Optional accessories for motorized change-over switches

Technical data and dimensional drawings for dual power sources

Technical data for dual power source ODPSE230C

Dual power source ODPSE230C	
Rated operational voltage U [V]	220...240 V AC +/- 20%
Rated frequency	50 / 60 Hz +/- 10%
Short-circuit protection device	Max. MCB 4 A
Nominal output current In [A]	4 A
Startup time	Max. 1.0 s (with 230 V AC)
Operating transfer time LN1 - LN2 or LN2 - LN1	Max. 0.5 s (with 230 V AC)
Cable size	0.2...2.5 mm²
Rated impulse withstand voltage, U_{imp}	4 kV
Overvoltage category	III
Pollution degree	3
Protection rating for the front panel	IP20
Operating temperature	– 25...+ 60 °C
Transportation and storage temperature	– 40...+ 70 °C
Altitude	Max. 2 000m

Technical data for new dual power source ODPS230 with ATS functionality

Dual power source ODPS230	
Rated operational voltage U [V]	220...240 V AC, 50 / 60 Hz
Maximum voltage	288 V AC
Pick-up voltage	≥198 V AC
Drop-out voltage	≤154 V AC
Operating time	1 s ± 0.5 s
Nominal output current In [A]	3.15 A
Rated conditional short-circuit current, I_p (r.m.s.)	50 kA
Internal fuse	T / 3.15 A / H*
Fuse size	6.3 x 32 mm
Rated impulse withstand voltage, U_{imp}	4 kV
Overvoltage category	III
Pollution degree	3
Cable size	Max. 6 mm²
Protection rating for the front panel	IP20
Operating temperature	– 25...+ 60 °C
Transportation and storage temperature	– 40...+ 70 °C
Altitude	Max. 2 000m

* The breaking capacity must be 50 kA to achieve 50 kA Ip (r.m.s.) rating

Dimensional drawings for dual power sources

ODPS230

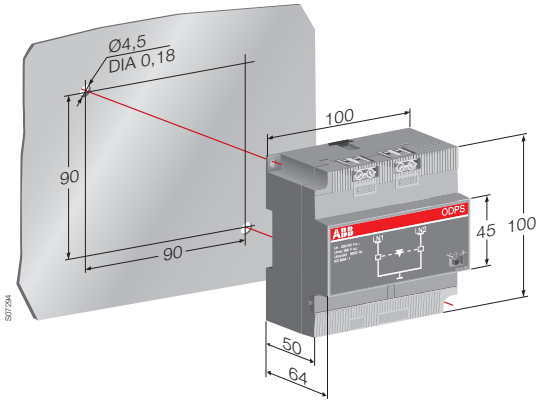

ODPSE230C

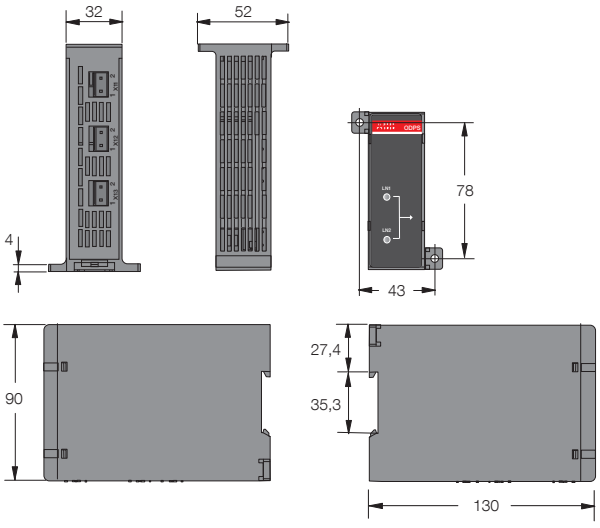

Main dimensions (mm)


UNITE
8

Motorized change-over switches

Technical data for OTM16...125_C

Switch size				OTM40_	OTM63_	OTM80_	OTM100_	OTM125_
Data according to IEC 60947-3								
Rated insulation voltage and rated operational voltage AC20/DC20		Pollution degree 3	V	800	800	800	800	800
Dielectric strength		50 Hz 1min.	kV	6	6	6	6	6
Rated impulse withstand voltage			kV	8	8	8	8	8
Rated thermal current and rated operational current AC20/DC20 ..with minimum conductor cross section	/ ambient 40°C	In open air	A	40	63	80	115	125
	/ ambient 40°C	In enclosure	A	40	63	80	115	125
	/ ambient 60°C	In enclosure	A	32	50	63	80	100
		Cu	mm²	10	16	25	35	50
Rated operational current, AC-21A		up to 500 V	A	40	63	80	100	125
		690 V	A	40	63	80	100	125
Rated operational current, AC-22A		up to 500 V	A	40	63	80	100	125
		690 V	A	40	63	80	100	125
Rated operational current, AC-23A		up to 415 V	A	40	63	80	80	90
		500 V	A	40	60	60	60	70
		690 V	A	40	40	40	40	50
Rated operational current / poles in series, DC-21A		up to 48 V	A	40/1	63/1	80/1	100/1	125/1
		110 V	A	40/2	63/2	80/2	100/2	125/2
		220 V	A	40/4	63/4	80/4	100/4	100/4
Rated operational current / poles in series, DC-22A		up to 48 V	A	40/1	63/1	80/1	100/1	125/1
		110 V	A	40/2	63/2	80/2	100/2	125/2
		220 V	A	40/4	63/4	80/4	80/4	80/4
Rated operational current / poles in series, DC-23A		up to 48 V	A	40/1	63/1	80/1	100/1	125/1
		110 V	A	40/2	63/2	80/2	100/2	125/2
		220 V	A	40/4	63/4	63/4	63/4	63/4
Rated operational power, AC-23A [1] The kW-ratings are accurate for 3-phase 1500 R.P.M. standard asychronous motors		230 V	kW	7.5	15	22	22	22
		415 V	kW	18.5	30	37	37	45
		500 V	kW	22	37	37	37	45
		690 V	kW	37	37	37	37	45
Rated breaking capacity in category AC-23		up to 415 V	A	320	504	640	640	720
		500 V	A	320	480	480	480	560
		690 V	A	320	320	320	320	400
Rated conditional short-circuit current I_p (r.m.s.) and corresponding max. allowed cut-off current $\hat{i}_c$ (peak) value. The cut-off current $\hat{i}_c$ refers to values listed by fuse manufacturers (single phase test acc. to IEC60269).	Ip (r.m.s.) 50 kA, 415 V	îc (peak)	kA	16.5	16.5	16.5	16.5	16.5
	Max. OFA_ fuse size	gG/aM	A/A	125/125	125/125	125/125	125/125	125/125
	Ip (r.m.s.) 18 kA, 690 V	îc (peak)	kA	11	11	11	11	11
	Max. OFA_ fuse size	gG	A	125	125	125	125	125
	Ip (r.m.s.) 50 kA, 690 V	îc (peak)	kA	10	10	10	10	10
	Max. OFA_ fuse size	gG/aM	A/A	63/63	63/63	63/63	63/63	63/63
Rated short-time withstand current	I_{cw} (r.m.s.)	690 V 1s	kA	2.5	2.5	2.5	2.5	2.5
Rated short-time making capacity [2]	I_{cm} (peak)	690 V	kA	3.6	3.6	3.6	3.6	3.6
Power loss / pole	With rated current		W	1.6	2.8	3.5	4.0	6.3
Mechanical endurance	Number of oper. cycles [3]		Cycles	10 000	10 000	10 000	10 000	10 000
Cable size	Cu-wire size suitable for		mm²	2.5-25/2x2.5-16	10-70	10-70	10-70	10-70
	terminal clamps		AWG	14-4/2x14-6	8-00	8-00	8-00	8-00
Terminal tightening torque	Counter torque required		Nm	6	6	6	6	6
Operating torque	3-pole switches		Nm	5	5	5	5	5
Weight without accessories	3-pole switch		kg	1.37	1.37	1.37	1.37	1.37
	4-pole switch		kg	1.60	1.60	1.60	1.60	1.60
Data according to IEC 60947-6-1								
Class of equipment				PC	PC	PC	PC	PC
Rated short-time withstand current	I_{cw} (r.m.s.)	690 V 0.1s	kA	5	5	5	5	5
Conditional short-circuit current	I_{cc} (r.m.s.)	415 V	kA	50	50	50	50	50
Corresponding fuse rating	gG/aM fuse	415 V	A	125	125	125	125	125
Rated operational current, AC-31B		up to 415 V	A	40	63	80	100	125
Rated operational current, AC-32B		up to 415 V	A	40	63	80	100	125
Rated operational current, AC-33B		up to 415 V	A	40	63	80	80	80

[1] These values are given for guidance and may vary according to the motor manufacturer
[2] Short circuit duration > 50ms, without fuse protection
[3] Operating cycle: O - I - O - II - O

Motorized change-over switches

Technical data for OTM160...800_C

Switch size				OT_160_	OT_200_	OT_250_	OT_315_	OT_400_	OT_630_	OT_800_
Data according to IEC 60947-3										
Rated insulation voltage and rated operational voltage AC20/DC20 [1]		Pollution degree 3 [2]	V	1000	1000	1000	1000	1000	1000	1000
Dielectric strength		50 Hz 1min.	kV	10	10	10	10	10	10	10
Rated impulse withstand voltage [3]			kV	12	12	12	12	12	12	12
Rated thermal current and rated operational current AC20/DC20 ..with minimum conductor cross section	/ ambient 40°C	In open air	A	160	200	250	315	400	630	800
	/ ambient 40°C	In enclosure	A	160	200	250	315	400	630	800
		Cu	mm²	70	95	120	185	240	2x185	2x240
Rated operational current, AC-21A		up to 500 V	A	160	200	250	315	400	630	800
		690 V	A	160	200	250	315	400	630	800
Rated operational current, AC-22A		up to 500 V	A	160	200	250	315	400	630	800
		690 V	A	160	200	250	315	400	630	800
Rated operational current, AC-23A		up to 500 V	A	160	200	250	315	400	630	800
		690 V	A	160	200	250	315	400	630	800
Rated operational current / poles in series, DC-21A [6]		≤ 110 V	A	160/2	200/2	250/2	315/1 [1]	400/1 [1]	630/1	800/1
		220 V	A	160/2	200/2	250/2	315/2 [1]	400/2 [1]	630/1	800/1
		440 V	A	160/3	200/3	230/3	315/3	360/3	630/2	720/2
		660 V	A	160/4	200/4	200/4	315/4	315/4	630/4 [1]	630/4 [1]
Rated operational power, AC-23A [2]		230 V	kW	45	60	75	100	132	200	250
The kW-ratings are accurate for 3-phase 1500 R.P.M. standard asychronous motors		400 V	kW	90	110	140	160	220	355	450
		415 V	kW	90	110	145	180	230	355	450
		500 V	kW	110	132	170	220	280	400	560
		690 V	kW	160	200	250	315	400	630	800
Rated breaking capacity in category AC-23		up to 415 V	A	1 280	1 600	2 000	2 520	3 200	5 040	6 400
		500 V	A	1 280	1 600	2 000	2 520	3 200	5 040	6 400
		690 V	A	1 280	1 600	2 000	2 520	3 200	5 040	6 400
Rated conditional short-circuit current I_p (r.m.s.) and cut-off current $\hat{i}_c$ (peak) value. The cut-off current $\hat{i}_c$ refers to values listed by fuse manufacturers (single phase test acc. to IEC60269).	Ip (r.m.s.) 80 kA, 415 V	îc (peak)	kA	40.5	40.5	40.5	59	59	83.5	83.5
	Max. OFA_ fuse size	gG/aM	A/A	355/315	355/315	355/315	500/500	500/500	800/1 000	800/1 000
	Ip (r.m.s.) 100 kA, 500 V	îc (peak)	kA	40.5	40.5	40.5	61.5	61.5	90	90
	Max. OFA_ fuse size	gG/aM	A	315/315	315/315	315/315	500/450	500/450	800/800	800/800
	Ip (r.m.s.) 80 kA, 690 V	îc (peak)	kA	40.5	40.5	40.5	59	59	83.5	83.5
	Max. OFA_ fuse size	gG/aM	A	355/315	355/315	355/315	500/500	500/500	800/1 000	800/1 000
Rated short-time withstand current	Icw (r.m.s.)	690 V 0.15s	kA	15	15	15	31	31	38	38
		690 V 0.25s	kA	15	15	15	24	24	36	36
		690 V 1s	kA	8	8	8	15	15	20	20
Rated short-time making capacity [3]	I_{cm} (peak) [4]	690 V	kA	30	30	30	65	65	80	80
Power loss / pole	With rated current		W	2.4	4	6.5	6.5	10	25	40
Mechanical endurance	Number of oper. cycles [5]		Cycles	8 000	8 000	8 000	8 000	8 000	5 000	5 000
Terminal bolt size	Metric thread diameter x length		mm	M8x25	M8x25	M8x25	M10x30	M10x30	M12x40	M12x40
Terminal tightening torque	Counter torque required		Nm	15-22	15-22	15-22	30-44	30-44	50-75	50-75
Operating torque	3-pole change-over switches		Nm	7	7	7	16	16	27	27
Weight without accessories	3-pole switch		kg	5.7	5.7	5.7	10.2	10.2	17.5	17.5
	4-pole switch		kg	6.4	6.4	6.4	11.4	11.4	20.4	20.4
Data according to IEC 60947-6-1										
Class of equipment				PC	PC	PC	PC	PC	PC	PC
Rated short-time withstand current	Icw (r.m.s.)	690 V 0.1s	kA	15	15	15	25	25	38	38
Rated operational current, AC-31B		up to 415 V	A	160	200	250	315	400	650	720
Rated operational current, AC-33B		up to 415 V	A	160	200	250	315	400	650	650

[1] Utilization category B
[2] These values are given for guidance and may vary acc. to the motor manufacturer
[3] Short circuit duration > 50ms, without fuse protection
[4] Max. distance from switch frame to nearest busbar / cable support 150 mm
[5] Operating cycle: O - I - O - II - O
[6] Further ratings on request

Motorized change-over switches

Technical data for OTM1000...3200_C

Switch size				OT_1000_	OT_1250_	OT_1600_	OT_2000_	OT_2500_	OT_3200_
Data according to IEC 60947-3									
Rated insulation voltage and rated operational voltage AC20/DC20 [1]		Pollution degree 3 [2]	V	1 000	1 000	1 000	1 000	1 000	1 000
Dielectric strength		50 Hz 1min.	kV	10	10	10	10	10	10
Rated impulse withstand voltage [3]			kV	12	12	12	12	12	12
Rated thermal current and rated operational current AC20/DC20 ..with minimum conductor cross section	/ ambient 40°C	In open air	A	1 000	1 250	1 600	2 000	2 500	3 200
	/ ambient 40°C	In enclosure	A						
		Cu	mm^2	2x300	2x400	2x500	3x500	4x500	4x1 000
Rated operational current, AC-21A		up to 500 V	A	1 000	1 250	1 600	2 000 [5]	2 500 [5]	3 200 [5]
		690 V	A	1 000	1 250	1 600			
Rated operational current, AC-22A		up to 500 V	A	1 000	1 250	1 600			
		690 V	A	1 000	1 250	1 600			
Rated operational current, AC-23A		up to 500 V	A	1 000	1 250	1 250			
		690 V	A	1 000	1 250	1 250			
Rated operational power, AC-23A [1] The kW-ratings are accurate for 3-phase 1500 R.P.M. standard asychronous motors		230 V	kW	315	400	400			
		415 V	kW	560	710	710			
		500 V	kW	710	900	900			
		690 V	kW	1 000	1 200	1 200			
Rated breaking capacity in category AC-23		up to 415 V	A	10 000	10 000	10 000			
		500 V	A	10 000	10 000	10 000			
		690 V	A	10 000	10 000	10 000			
Rated conditional short-circuit current I_p (r.m.s.) and cut-off current $\hat{i}_c$ (peak) value. The cut-off current $\hat{i}_c$ refers to values listed by fuse manufacturers (single phase test acc. to IEC60269).	I_p (r.m.s.) 80 kA, 415 V	$\hat{i}c$ (peak)	kA	100	100	100			
	Max. OFA_ fuse size	gG/aM	A/A	1 250/1 250	1 250/1 250	1 250/1 250			
	I_p (r.m.s.) 100 kA, 500 V	$\hat{i}c$ (peak)	kA	106	106	106			
	Max. OFA_ fuse size	gG/aM	A	1 250/1 250	1 250/1 250	1 250/1 250			
	I_p (r.m.s.) 80 kA, 690 V	$\hat{i}c$ (peak)	kA						
	Max. OFA_ fuse size	gG/aM	A						
Rated short-time withstand current	I_{cw} (r.m.s.)	690 V 0.15s	kA	50	50	50	50	50	
		690 V 0.25s	kA	50	50	50	50	50	
		690 V 1s	kA	50	50	50	55	55	65
Rated short-time making capacity [2]	I_{cm} (peak) [3]	690 V	kA	92	92	92	110	110	143
Power loss / pole	With rated current		W	19	29	48	55	85	95
Mechanical endurance	Number of oper. cycles [4]		Cycles	3 000	3 000	3 000	2 000	2 000	2 000
Terminal bolt size	Metric thread diameter x length		mm	M12x60	M12x60	M12x60	M12x60	M12x60	M12x100
Terminal tightening torque	Counter torque required		Nm	50-75	50-75	50-75	50-75	50-75	50-75
Operating torque	3-pole change-over switches		Nm	78	78	78	78	78	80
Weight without accessories	3-pole switch		kg	42	42	44	56	56	83
	4-pole switch		kg	50	50	52	70	70	101
Data according to IEC 60947-6-1									
Class of equipment				PC	PC	PC			
Rated short-time withstand current	I_{cw} (r.m.s.)	690 V 0.1s	kA	50	50	50			
Rated operational current, AC-31B		up to 415 V	A	1 000	1 250	1 600			
Rated operational current, AC-33B		up to 415 V	A	1 000	1 000	1 000			

[1] These values are given for guidance and may vary acc. to the motor manufacturer
[2] Short circuit duration > 50ms, without fuse protection
[3] Max. distance from switch frame to nearest busbar / cable support 150 mm
[4] Operating cycle: O - I - O - II - O
[5] Category AC-21B, up to 415V

Motorized change-over switches

Motor operator performance data for OTM40…125_C

Switch size				**40…125**
Data according to IEC 60947				
Rated operational voltage U_e	Pollution degree 3		V AC/DC	110 - 240
	50/60 Hz		V DC	24
Operating voltage range				0.85 - 1.1 x U_e
Operating time [1]	90° I-0, 0-I, 0-II, II-0	110…240 V AC/DC	s	0.5-1.0
		24 V DC	s	0.6-1.3
Operating transfer time [1]	180° I-II, II-I	110…240 V AC/DC	s	1.2-1.5
		24 V DC	s	1.4-2.1
OFF -time when operating I-II or II-I [1]	180° I-II, II-I	110…240 V AC/DC	s	0.4-0.8
		24 V DC	s	0.6-1.0
Nominal current In [1]		110…240 V AC/DC	A	0.2-0.5
		24 V DC	A	0.6
Current inrush [1]		110…240 V AC/DC	A	1.5-3.0
		24 V DC	A	3.6
Operating rate	Cycle 0-I-0-II-0	Max. continuous	cycles/min	1
		Max. short-time ≤ 10 cycles	cycles/min	10
Overvoltage category				III
Rated impulse withstand voltage U_{imp}			kV	4
Dielectric strength		50 Hz 1 min.	kV	1.5
Impulse command		Min. impulse duration	ms	100
Terminals				
Voltage supply wiring for U_e				PE - N - L
Cross section		Solid/stranded	mm²	1.5 - 2.5
Short-circuit protection device		Max. MCB	A	C16
Control terminal				C - II - I - O
Cross section		Solid/stranded	mm²	1.5 - 2.5
Maximum cable length			m	100
Terminal for state information				
Terminal for state information Also used with the OMD automatic control unit	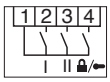	Solid/stranded	mm²	1.5
		Rating	A	3
				AC-1/250V
Common, voltage supply	1			
Position of switch I	2			
Position of switch II	3			
Handle attached or motor operator locked	4			
Short-circuit protection device		Max. MCB	A	C2
Control terminal for OMD automatic control unit				
Control terminal for OMD automatic control unit	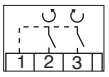	Solid/stranded	mm²	1.5 - 2.5
Common, voltage supply from motor operator	1		V DC	24
Close switch I or open switch II	2		V DC	24
			mW	500
Close switch II or open switch I	3		V DC	24
			mW	500
Operating temperature			°C	-25…+55
Transportation and storage temperature			°C	-40…+70
Max. altitude			m	2 000
Protection degree (front panel)				IP20

[1] Under nominal conditions

Motorized change-over switches

Motor operator performance data for OTM160…3200_C

Switch size				160…250	315…400	630…800	1000…1600	2000…3200
Data according to IEC 60947								
Rated operational voltage U_e	Pollution degree 3 50/60 Hz		V AC	220 - 240				
			V AC/DC	110 - 125				
			V DC	48				
			V DC	24				
Operating voltage range				0.85 - 1.1 x U_e				
Operating time [1]	90° I-0, 0-I, 0-II, II-0	220-240VAC	s	0.4-1.0	0.4-1.0	0.4-1.0	0.5-1.5	0.5-1.5
		110-125VAC/DC	s	0.5-1.5	0.5-1.5	0.6-1.2	0.5-1.5	0.5-1.5
		48VDC	s	0.5-1.5	0.4-1.0	0.6-1.6	0.5-1.5	0.5-1.5
		24VDC	s	0.4-1.0	0.4-1.0	0.5-1.5	1.0-2.0	1.0-2.0
Operating transfer time [1]	180° I-0-II, II-0-I	220-240VAC	s	1.0-2.0	0.9-2.0	0.9-2.0	1.5-3.0	1.5-3.0
		110-125VAC/DC	s	1.1-2.5	1.2-2.6	1.2-3.0	1.5-3.0	1.5-3.0
		48VDC	s	1.4-2.5	1.0-2.0	1.3-3.0	1.5-3.0	1.5-3.0
		24VDC	s	1.0-2.0	1.0-2.0	1.1-2.5	2.0-3.5	2.0-3.5
OFF -time when operating I-II or II-I [1]	180° I-II, II-I	220-240VAC	s	0.4-1.0	0.4-1.0	0.4-1.0	0.5-1.5	0.5-1.5
		110-125VAC/DC	s	0.4-1.1	0.5-1.5	0.6-1.5	0.5-1.5	0.5-1.5
		48VDC	s	0.5-1.1	0.4-1.0	0.7-1.6	0.5-1.5	0.5-1.5
		24VDC	s	0.4-1.0	0.4-1.0	0.5-1.5	0.8-1.7	0.8-1.7
Nominal current In [1]		220-240VAC	A	0.2	0.5	0.7	1.8	1.8
		110-125VAC/DC	A	0.5	0.6	0.8	3.0	3.0
		48VDC	A	1.1	2.1	2.6	5.3	5.3
		24VDC	A	3.3	4.2	4	8.0	8.0
Current inrush [1]		220-240VAC	A	1.3	2.1	2.8	7.7	7.7
		110-125VAC/DC	A	2.1	2.5	4.6	13.3	13.3
		48VDC	A	4.4	8.3	8.4	22.4	22.4
		24VDC	A	16.8	17.5	22.4	26.6	26.6
Overload fuse	Type / In / Capacity	220-240VAC	mA	T/315/H	T/500/H	T/1 000/H	T/2 000/H	T/2 000/H
		110-125VAC/DC	mA	T/500/H	T/630/H	T/1 000/H	T/4 000/H	T/4 000/H
		48VDC	A	T/1.25/H	T/2.5/H	T/2.5/H	T/5/H	T/5/H
		24VDC	A	T/4.0/H	T/5.0/H	T/5.0/H	T/10/H	T/10/H
	Size		mm	5x20	5x20	5x20	5x20	5x20
Operating rate	Cycle 0-I-0-II-0, max. continuous	220-240VAC	cycles/min	1	1	1	0.5	0.5
		110-125VAC/DC	cycles/min	1	1	1	0.5	0.5
		48VDC	cycles/min	1	1	1	0.5	0.5
		24VDC	cycles/min	1	1	1	0.5	0.5
	Max. short-time, ≤ 10 cycles	220-240VAC	cycles/min	10	10	10	5	5
		110-125VAC/DC	cycles/min	10	10	10	5	5
		48VDC	cycles/min	10	10	10	5	5
		24VDC	cycles/min	10	10	10	5	5
Overvoltage category				III				
Rated impulse withstand voltage U_{imp}			kV	4				
Dielectric strength		50 Hz 1 min.	kV	1.5				
Impulse command		Min. impulse duration	ms	100				
Terminals								
Voltage supply wiring for U_e				PE - N - L				
Cross section		solid/stranded	mm^2	1.5 - 2.5				
Short-circuit protection device		max. MCB	A	C16				
Control terminal (no SELV)				C - II - I - O				
Cross section		solid/stranded	mm^2	1.5 - 2.5				
Maximum cable length			m	100				
State information of locking (no SELV)								
Handle attached or motor operator locked		11-12-14 (C/O)		5A/250V/cosΦ=1				
Locking motor operator		23-24 (NO)		5A/250V/cosΦ=1				
Short-circuit protection device		Max. MCB	A	C2				
Protection degree				IP20				
Operating temperature			°C	-25…+55				
Transportation and storage temperature			°C	-40…+70				
Max. altitude			m	2 000				

[1] Under nominal conditions

04

Compact ATS



Compact ATS

Automatic transfer switches

Introduction to manual and motorized bypass switches

General information	86
Dimensional drawings	87

Ordering information

OTM_C20D	89
OTM_C21D	89
Accessories	90

Dimensional drawings

Compact ATS	92

Technical data

OTM_C_D	93
OTM40...125_	95

Compact ATS

40...125 Amperes

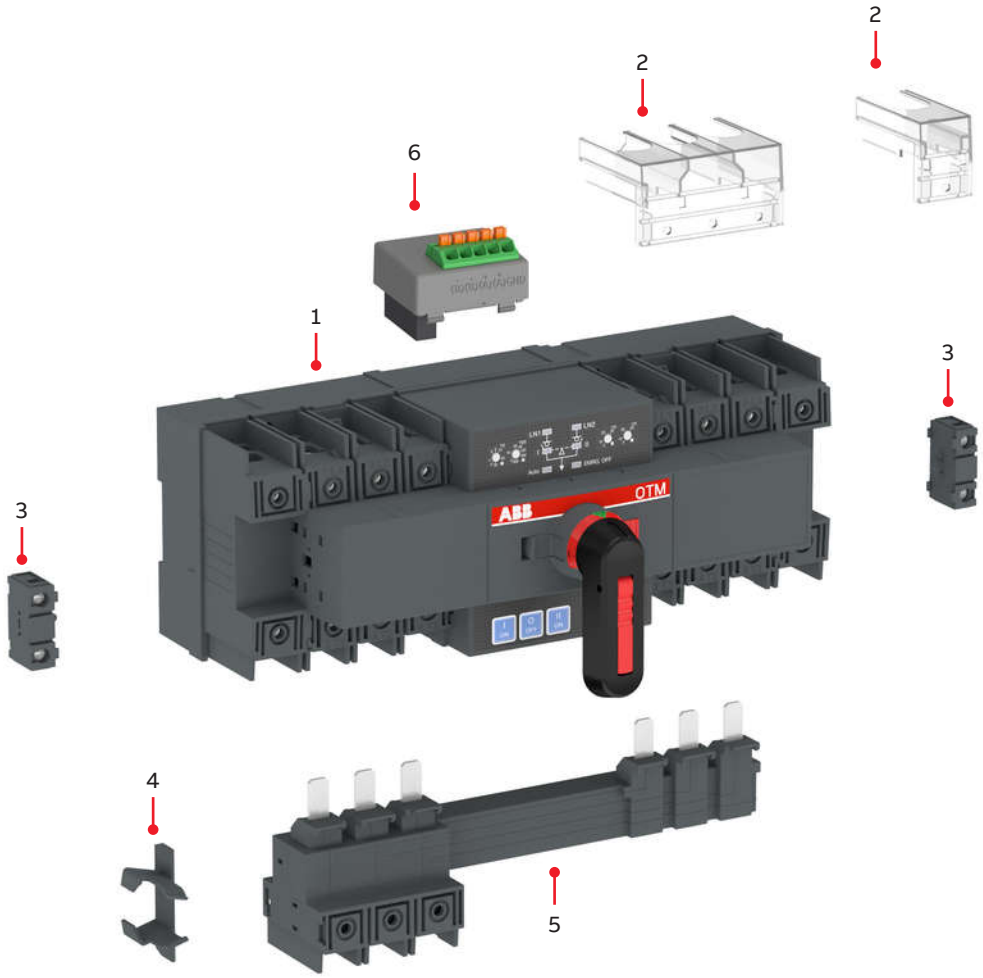

Compact ATS Accesory guide

1. Compact ATS
2. Terminal shroud
3. Auxiliary contact
4. Storage clip
5. Bridging bar
6. Modbus RTU module (21D)

To learn how to install the key accessories, watch the video

Compact ATS – Range and installation of accessories

Please note that not all listed accessories are automatically included in your order.
See next page for recommendations.

Compact ATS

Compact without compromise

The new Compact ATS by ABB is just that – It's a compact, economical and innovative all-in-one solution that delivers all the safety and performance you would expect from a product supplying your most valuable assets. An automatic transfer switch does not need to be complex and difficult to use. Compared to conventional solutions, the ABB Compact ATS offers 100% easier and simpler operation in a 40% more compact package.



OTM_C20D, for Network/Network applications.



OTM_C21D, for Network/Network and Network/Genset applications.

The Compact ATS is an ideal device for securing the availability of stand-by power in a wide variety of residential, commercial, industrial and agricultural structures. The IEC 60947-6-1 tested devices fulfil the requirements of Part 6-1, making them multiple function apparatus. ABB Compact ATS is a safe and approved solution for any application where a reliable and complete source transfer device is required.

To learn how Compact ATS works, watch the video

Compact ATS – Operation and functionality

Compact ATS

Compact without compromise



DIN- rail mounting



Easy manual operation with the handle in case of emergency

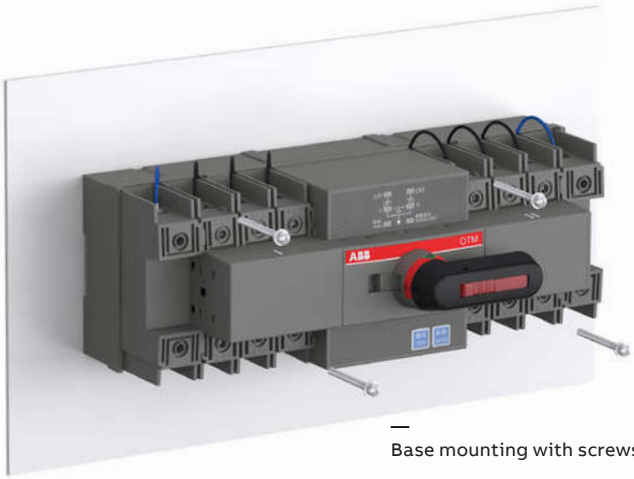

Base mounting with screws

Safety and protection
All current-carrying parts of the device are fully enclosed without exposed wiring, providing protection against direct contact. In case of an emergency or testing event, an external, easily accessible manual handle provides a safe and easy (electrical or non-electrical) source transfer.

Space saving
The device has been designed to be extremely compact and fully enclosed. Compared to a conventional solution, the Compact ATS takes up approximately 40% less cabinet space. The all-in-one design means that no additional accessories are needed. You don't even need an extra external power source.

Affordable range
Affordability has been one of the key objectives for this device. The available functionalities have been carefully selected to meet market requirements without added niche features that would elevate price. It is simple, reliable and functional.

Accurate communication
The in-built IO signals enable you to control your system conveniently. The remote test signal allows you to pre-test and maintain your ATS at any time. Modbus RTU communication is available for Compact ATS adjustable versio ns. with Compact ATS, you are ready for connectivity now and in the future.

Ordering information

OTM_C_D products



OTM_C20D
For Network/Network application

Fixed version with pre-defined delay times and voltage thresholds

Fixed version

Number of poles	Rated current [A]	Rated voltage [V]	Voltage sensing	Type	Ordering code	Weight [kg]
2	63	230-220-240	Top in	OTM63F2C20D230C	1SCA151421R1001	1.75
2	125	230-220-240	Top in	OTM125F2C20D230C	1SCA151417R1001	1.75
3	63	380-400-415	Top in	OTM63F3C20D400C	1SCA151423R1001	1.75
3	125	380-400-415	Top in	OTM125F3C20D400C	1SCA151419R1001	1.75
4	40	380-400-415	Top in	OTM40F4C20D400C	1SCA151252R1001	2.00
4	63	380-400-415	Top in	OTM63F4C20D400C	1SCA151254R1001	2.00
4	125	380-400-415	Top in	OTM125F4C20D400C	1SCA151250R1001	2.00



OTM_C21D
For Network/Network and Network/Genset applications

Adjustable version with configurable transfer and back-switching delays
Adjustable over and under-voltage thresholds

Modbus RTU access available with plug-in Modbus RTU module. See accessories section, page 90.

Adjustable version

Number of poles	Rated current [A]	Rated voltage [V]	Voltage sensing	Type	Ordering code	Weight [kg]
2	63	230-220-240	Top in	OTM63F2C21D230C	1SCA151422R1001	1.75
2	125	230-220-240	Top in	OTM125F2C21D230C	1SCA151418R1001	1.75
3	63	380-400-415	Top in	OTM63F3C21D400C	1SCA151424R1001	1.75
3	125	380-400-415	Top in	OTM125F3C21D400C	1SCA151420R1001	1.75
4	40	380-400-415	Top in	OTM40F4C21D400C	1SCA151253R1001	2.00
4	63	380-400-415	Top in	OTM63F4C21D400C	1SCA151255R1001	2.00
4	125	380-400-415	Top in	OTM125F4C21D400C	1SCA151251R1001	2.00
4	40	380-400-415	Bottom in	OTM40F4CB21D400C	1SCA150580R1001	2.00
4	63	380-400-415	Bottom in	OTM63F4CB21D400C	1SCA150586R1001	2.00
4	125	380-400-415	Bottom in	OTM125F4CB21D400C	1SCA150574R1001	2.00

Ordering information
Accessories



OTVS0

Handles, direct mounting

Plastic I - O - II handle.

Suitable for switches	Colour	Installation side	Type	Order number	Units/type [pcs]	Weight/ unit [kg]
OTM40…125F_CM	Black	Shaft incl.	OHB65D6CM	1SCA022807R9430	1	0.12



OA1G01
OA7G10

Handle storage clip

The handle can be stored in the handle storage clip OTVS0. The handle storage clip can be fixed to a panel frame using the included adhesive tape.

Suitable for switches	Type	Order number	Units/type [pcs]	Weight/ unit [kg]
OTM40…125F_CM	OTVS0	1SCA117524R1001	1	0.02



OA1G10
OA8G01

Auxiliary contacts

Snap-on mounting to the switch, IP 20, max. 2 blocks/ side. I_{th} = 16 A, suitable for cable cross sections max. 2 x 2.5 mm^2. Simultaneous action with the main contacts. The type and ordering number is for one piece.

Suitable for switches	Contact function	Installation side	Type	Order number	Units/type [pcs]	Weight/ unit [kg]
OTM40...125F_CM	1NO	Right	OA1G10	1SCA022353R4970	1	0.03
OTM40...125F_CM	1NC	Right	OA8G01	1SCA022744R2240	1	0.03
OTM40...125F_CM	1NO	Left	OA7G10	1SCA022673R1140	1	0.03
OTM40...125F_CM	1NC	Left	OA1G01	1SCA022353R4890	1	0.03



RTU module

Modbus RTU module

The plug-in module can be mounted on top of 21D/adjustable versions of Compact ATS

Suitable for switches	Description	Type	Order number	Units/type [pcs]	Weight/ unit [kg]
OTM40...125F_CM (21D)	OTM RTU MODULE	2TFC800169R1001	1SCA161952R10011	1	0.03

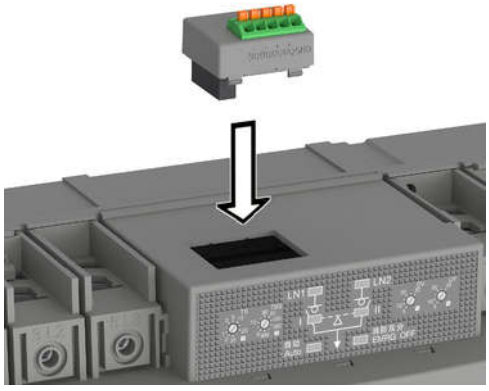

Mounting of Modbus RTU module

Ordering information
Accessories

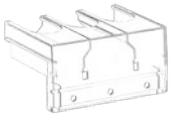
OTS_T3


OTS_T1


OZXT1


OZXT2...3


OZXT6


OMZC_

Terminal shrouds

Transparent plastic, snap-on mounting to the switches, IP20. The full shrouding of a 3-pole change-over switch is achieved with four 3-pole shrouds.*

Suitable for switches	Type	Order number	Units/type	Weight/ unit
			pcs	kg
For three pole switches				
OTM40...125F_CM	OTS125T3	1SCA022379R9680	1	0.03
For fourth pole				
OTPS60FP, OTPS125FP	OTS125T1	1SCA022379R9760	1	0.03

Terminal clamp sets

Suitable for switches	Contact function	Type	Order number	Units/type	Weight/ unit
				pcs	kg
Terminal clamp sets for Al- and Cu-cables insulated versions					
OTM40...125F_CM	16...50 Al / 2.5...50 Cu	OZXT1	1SCA022469R6310	3	0.06
OTM63...125F_CM	16...120 Al/Cu	OZXT2	1SCA022620R7200	3	0.21
OTM63...125F_CM	2x(16...50) Al/Cu	OZXT3	1SCA022639R0720	3	0.21
Including 0.75...2.5 mm2 voltage sensing connection. Voltage sensing wires are not included in the delivery					
OTM40...125F_CM	16...50 Al/2.5...50 Cu	OZXT6	1SCA122537R1001	3	0.06
Terminal clamp sets for Al- and Cu-cables					
OTM40...125F_CM	10...70 Al/Cu	OZXL1	1SCA022439R6770	3	0.14

Parallel connection kits

Finger protected connection bars for parallel connection of the upper or lower terminals. The bars accept additional cables, the maximum size is stated below.

Suitable for switches	Cable crosssection	Type	Order number	Units/type	Weight/ unit
	mm²			pcs	kg
OTM40F3CM_	2.5...25/2x2.5...16	OMZC003	1SCA121324R1001	1	0.5
OTM40F4CM_	2.5...25/2x2.5...16	OMZC004	1SCA121325R1001	1	0.65
OTM40…125F3CM_	10...70	OMZC03	1SCA117037R1001	1	0.5
OTM40…125F4CM_	10...70	OMZC04	1SCA117038R1001	1	0.65

* Terminal shrouds can also be mounted on parallel connection kits.
Parallel connection kit cannot be used with 2 pole devices

Compact ATS

Dimensional drawings

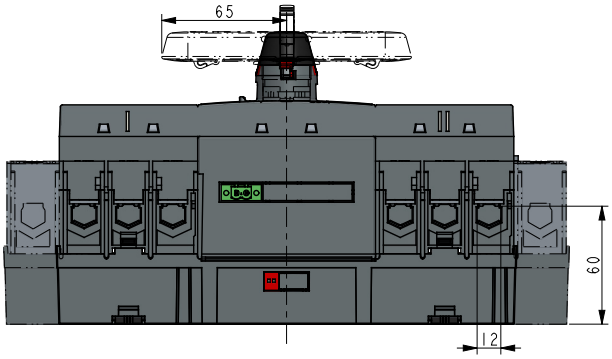

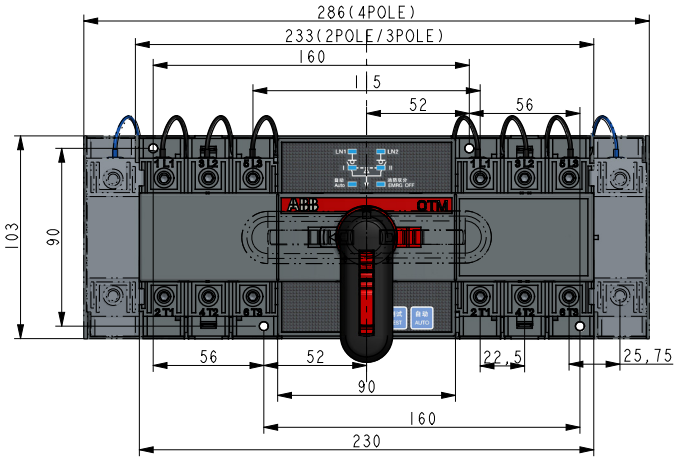

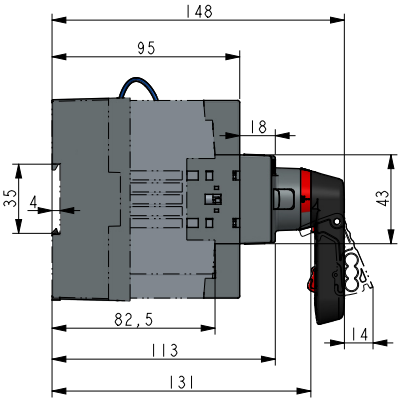

Technical features and functionality
Compact ATS

Automatic transfer switches functionality

OTM_C_D products overview		OTM_C20D_ Fixed version	OTM_C21D_ Adjustable version
Features			
	Single phase (2 poles)	220~240+/-20%	220~240+/-20%
Rated operational voltage U_e	Three phase (3 and 4 poles)	380~415+/-20%	380~415+/-20%
Rated frequency		50 / 60 Hz +/- 10%	
Voltage sensing precision		5%	3%
Rated impulse withstand voltage, U_{imp}		6 kV	
Overvoltage category		III	
Pollution degree		3	
Protection rating for the front panel		IP20	
Operating temperature		– 20...+ 55 °C	
Transportation and storage temperature		– 25...+ 70 °C	
Altitude		Max. 2000m	
Humidity With condensation		50% at 40 °C, 90% at 20°C	
Humidity Without condensation		50% at 40 °C, 90% at 20°C	
Operation Types			
Manual operation with handle		x	x
Local operation with front panel keypad			x
Automatic transfer switching equipment (ATSE)		x	x
Applications			
Transfer between two Transformers		x	x
Transfer between a Transformers and a generator			x
Operation modes			
Automatic transfer and back-switching operation		x	x
Automatic transfer and manual back-switching operation			x
Source failure detections			
No voltage		x	x
Undervoltage			0.7-0.95 U_e
Overvoltage			1.05-1.3 U_e
Phase missing		x	x
Voltage unbalance			
Invalid frequency			
Configuration			
By DIP switches		x	x
By rotary switches			x
Two power status display		x	x
Two switches status display		x	x
Auto status display		x	x
Alarm display		x	x

Technical data

Compact automatic transfer switches

Automatic transfer switches functionality

OTM_C_D products overview	OTM_C20D_	OTM_C21D_
Time delays		
Delay on transfer [1]		0-30s
Back-switching delay		0-900s
Generator stop delay		240s
Signals input and output		
Emergency Off with 24VDC signal input	x	x
Test signal input		x
Switch position signal	With Auxiliary contacts	Without Auxiliary contact
Alarm output signal		x
Modbus RTU access[2]		x

[1] Overvoltage and undervoltage conditions
[2] With Modbus RTU plug-in module

Technical data

Compact automatic transfer switches OTM40...125_

Compact automatic transfer switches

				Switch size		
Data according to IEC 60947-3				**OTM40_**	**OTM63_**	**OTM125_**
Rated insulation voltage and rated operational voltage AC20/DC20		Pollution degree 3	V	750	750	750
Dielectric strength		50 Hz 1min.	kV	6	6	6
Rated impulse withstand voltage			kV	8	8	8
Rated thermal current and rated operational current AC20/DC20	/ ambient 40°C	In open air	A	40	63	125
	/ ambient 40°C	In enclosure	A	40	63	125
	/ ambient 60°C	In enclosure	A	32	50	100
..with minimum conductor cross section		Cu	mm²	10	16	50
Rated operational current, AC-21A		up to 500 V	A	40	63	125
		690 V	A	40	63	125
Rated operational current, AC-22A		up to 500 V	A	40	63	125
		690 V	A	40	63	125
Rated operational current, AC-23A		up to 415 V	A	40	63	90
		500 V	A	40	60	70
		690 V	A	40	40	50
Rated operational current / poles in series, DC-21A		up to 48 V	A	40/1	63/1	125/1
		110 V	A	40/2	63/2	125/2
		220 V	A	40/4	63/4	125/4
Rated operational current / poles in series, DC-22A		up to 48 V	A	40/1	63/1	125/1
		110 V	A	40/2	63/2	125/2
		220 V	A	40/4	63/4	80/4
Rated operational current / poles in series, DC-23A		up to 48 V	A	40/1	63/1	125/1
		110 V	A	40/2	63/2	125/2
		220 V	A	40/4	63/4	63/4
Rated operational power, AC-23A[1)]		230 V	kW	7.5	15	22
The kW-ratings are accurate for 3-phase 1500 R.P.M. standard asychronous motors		400 V	kW	18.5	30	45
		415 V	kW	18.5	30	45
		500 V	kW	22	37	45
		690 V	kW	37	37	45
Rated breaking capacity in category AC-23		up to 415 V	A	320	504	720
		500 V	A	320	480	560
		690 V	A	320	320	400
Rated conditional short-circuit current I_p (r.m.s.) and corresponding max. allowed cut-off current $\hat{i}_c$ (peak) value.	Ip (r.m.s.) 50 kA, 415 V	$\hat{i}$c (peak)	kA	16.5	16.5	16.5
	Max. OFA_ fuse size	gG/aM	A/A	125/125	125/125	125/125
	Ip (r.m.s.) 18 kA, 690 V	$\hat{i}$c (peak)	kA	11	11	11
The cut-off current $\hat{i}_c$ refers to values listed by fuse manufacturers (single phase test acc. to IEC60269).	Max. OFA_ fuse size	gG	A	125	125	125
	Ip (r.m.s.) 50 kA, 690 V	$\hat{i}$c (peak)	kA	10	10	10
	Max. OFA_ fuse size	gG/aM	A/A	63/63	63/63	63/63
Rated short-time withstand current	Icw (r.m.s.)	690 V 1s	kA	2.5	2.5	2.5
Rated short-time making capacity2)	Icm (peak)	690 V	kA	3.6	3.6	3.6
Power loss / pole	With rated current		W	1.6	2.8	6.3
Mechanical endurance	Number of oper. cycles[3)]		Cycles	10 000	10 000	10 000
Cable size	Cu-wire size suitable for terminal clamps		mm²	10-70	10-70	10-70
			AWG	8-00	8-00	8-00
Terminal tightening torque	Counter torque required		Nm	6	6	6
Operating torque	Typical for 3-pole switches		Nm	5	5	5
Weight without accessories	3-pole switch		kg	1.75	1.75	1.75
	4-pole switch		kg	2.00	2.00	2.00

Technical data

Compact automatic transfer switches OTM40...125_

Compact automatic transfer switches

				Switch size		
Data according to IEC 60947-6-1				**OTM40_**	**OTM63_**	**OTM125_**
Class of equipment				PC	PC	PC
Rated short-time withstand current	Icw (r.m.s.)	690 V 0.1s	kA	5	5	5
Conditional short-circuit current	Icc (r.m.s.)	415 V	kA	50	50	50
Corresponding fuse rating	gG/aM fuse	415 V	A	125	125	125
Rated operational current, AC-31B		up to 415 V	A	40	63	125
Rated operational current, AC-32B		up to 415 V	A	40	63	125
Rated operational current, AC-33B		up to 415 V	A	40	63	80

[1] These values are given for guidance and may vary according to the motor manufacturer
[2] Short circuit duration > 50ms, without fuse protection
[3] Operating cycle: O - I - O - II - O


SERVER SYSTEM 5000

Index

Type	Order code	Page
OA1G01	1SCA022353R4890	41, 73, 90
OA1G10	1SCA022353R4970	41, 73, 90
OA1G10AU	1SCA022436R7910	41, 73
OA2G11	1SCA022379R8100	41, 73
OA3G01	1SCA022456R7410	41, 73
OA3G01AU	1SCA022819R5260	41, 73
OA7G10	1SCA022673R1140	41, 73, 90
OA8G01	1SCA022744R2240	41, 73, 90
ODPS230	1SCA122946R1001	76
ODPSE230C	1SCA116892R1001	76
OHB125J12E011	1SCA022589R3340	33
OHB125J12E311	1SCA022615R1730	33
OHB145J12E69	1SCA112066R1001	33
OHB200J12PE011	1SCA022873R4230	33
OHB200J12PE311	1SCA104685R1001	33
OHB274J12E011	1SCA122306R1001	33
OHB45J6E011	1SCA022594R7110	33
OHB45J6E311	1SCA022817R2130	15, 33
OHB65D6CM	1SCA022807R9430	34, 90
OHB65J6E011	1SCA022383R2480	33
OHB65J6E311	1SCA022662R4730	33
OHB65J6E65	1SCA112050R1001	34
OHB65J6E69	1SCA112052R1001	33
OHB95J12E011	1SCA022621R0760	33
OHB95J12E311	1SCA022779R2140	33
OHB95J12E65	1SCA112056R1001	34
OHB95J12E69	1SCA112058R1001	33
OHBS11	1SCA109092R1001	32
OHBS11/1	1SCA109093R1001	32
OHBS12	1SCA108252R1001	32
OHBS12/1	1SCA109094R1001	32
OHBS2	1SCA109089R1001	32
OHBS2/1	1SCA109090R1001	32
OHBS2AJE011	1SCA105220R1001	15, 33
OHBS3	1SCA108320R1001	15, 32
OHBS3/1	1SCA108319R1001	32
OHBS9	1SCA108665R1001	15, 32
OHBS9/1	1SCA108689R1001	32
OHBZX200	1SCA125960R1001	68
OHBZX275	1SCA125963R1001	68
OHRS12	1SCA108253R1001	32
OHRS12/1	1SCA109097R1001	32
OHRS2	1SCA108598R1001	32
OHRS2/1	1SCA108599R1001	32
OHRS3	1SCA108667R1001	32
OHRS3/1	1SCA108688R1001	32
OHRS9	1SCA108666R1001	32
OHRS9/1	1SCA108690R1001	32
OHY125J12E011	1SCA022615R1650	33
OHY200J12PE011	1SCA104686R1001	33
OHY45J6E011	1SCA022817R2210	33
OHY45J6E311	1SCA022817R2300	33
OHY65J6E011	1SCA022779R1840	33
OHY95J12E011	1SCA022621R0920	33
OHYS2AJE011	1SCA105301R1001	33
OMD300E480C-A1	1SCA123790R1001	74
OMD800E480C-A1	1SCA123791R1001	74
OMZB18	1SCA120153R1001	72
OMZB28	1SCA120154R1001	72
OMZB38	1SCA120155R1001	72
OMZB48	1SCA120156R1001	72

Type	Order code	Page
OMZC003	1SCA121324R1001	38, 53, 72, 91
OMZC004	1SCA121325R1001	38, 53, 72, 91
OMZC03	1SCA117037R1001	38, 53, 72, 91
OMZC04	1SCA117038R1001	38, 53, 72, 91
OMZC2	1SCA101001R1001	74
OMZD1	1SCA022787R5190	74
OT1000E03CP	1SCA022872R1680	20
OT1000E04CP	1SCA022872R1500	20
OT1000E22CP	1SCA103289R1001	20
OT100F3C	1SCA105008R1001	15, 23
OT100F4C	1SCA105019R1001	15, 23
OT1250E03CP	1SCA022872R0790	20
OT1250E04CP	1SCA022872R1250	20
OT1250E22CP	1SCA103311R1001	20
OT125F3C	1SCA105037R1001	15
OT125F4C	1SCA105054R1001	15
OT1600E03CP	1SCA022872R1840	20
OT1600E04CP	1SCA022872R2310	20
OT1600E22CP	1SCA103303R1001	20
OT160E03CFP	1SCA106086R1001	21
OT160E03CLP	1SCA108468R1001	22
OT160E03CP	1SCA022772R6510	17
OT160E03WCFP	1SCA108484R1001	21
OT160E03WCLP	1SCA108486R1001	22
OT160E03WCP	1SCA022772R8210	17
OT160E03YLP	1SCA145895R1001	24
OT160E03YP	1SCA123551R1001	24
OT160E04CFP	1SCA108489R1001	21
OT160E04CLP	1SCA108491R1001	22
OT160E04CP	1SCA022775R9440	17
OT160E04WCFP	1SCA108492R1001	21
OT160E04WCLP	1SCA108494R1001	22
OT160E04WCP	1SCA022775R0220	17
OT160E04YLP	1SCA145907R1001	24
OT160E04YP	1SCA123556R1001	24
OT16F3C	1SCA104816R1001	15
OT16F4C	1SCA104831R1001	15
OT2000E03CP	1SCA103908R1001	20
OT2000E04CP	1SCA103912R1001	20
OT2000E22CP	1SCA103953R1001	20
OT200E03CFP	1SCA108520R1001	21
OT200E03CLP	1SCA108522R1001	22
OT200E03CP	1SCA022771R7520	17
OT200E03WCFP	1SCA107578R1001	21
OT200E03WCLP	1SCA108525R1001	22
OT200E03WCP	1SCA022772R8720	17
OT200E03YLP	1SCA145896R1001	24
OT200E03YP	1SCA123552R1001	24
OT200E04CFP	1SCA108528R1001	21
OT200E04CLP	1SCA108530R1001	22
OT200E04CP	1SCA022771R7280	17
OT200E04WCFP	1SCA108531R1001	21
OT200E04WCLP	1SCA108532R1001	22
OT200E04WCP	1SCA022775R0650	17
OT200E04YLP	1SCA145908R1001	24
OT200E04YP	1SCA123557R1001	24
OT200U03CP	1SCA022771R5910	23
OT200U04CP	1SCA022771R6210	23
OT2500E03CP	1SCA105615R1001	20
OT2500E04CP	1SCA103906R1001	20
OT2500E22CP	1SCA103902R1001	20

Index

Type	Order code	Page
OT250E03CFP	1SCA108591R1001	21
OT250E03CLP	1SCA108593R1001	22
OT250E03CP	1SCA022771R3450	17
OT250E03WCFP	1SCA107577R1001	21
OT250E03WCLP	1SCA107576R1001	22
OT250E03WCP	1SCA022772R8300	17
OT250E03YLP	1SCA145897R1001	24
OT250E03YP	1SCA123553R1001	24
OT250E04CFP	1SCA108600R1001	21
OT250E04CLP	1SCA108605R1001	22
OT250E04CP	1SCA022775R4640	17
OT250E04WCFP	1SCA108606R1001	21
OT250E04WCLP	1SCA108607R1001	22
OT250E04WCP	1SCA022775R0810	17
OT250E04YLP	1SCA145909R1001	24
OT250E04YP	1SCA123558R1001	24
OT250E13CP	1SCA022777R0330	17
OT250E33CP	1SCA118551R1001	17
OT250E33WCP	1SCA118608R1001	17
OT25F3C	1SCA104863R1001	15
OT25F4C	1SCA104877R1001	15
OT30F3C	1SCA105071R1001	23
OT30F4C	1SCA146051R1001	23
OT315E03CFP	1SCA108629R1001	21
OT315E03CLP	1SCA108630R1001	22
OT315E03CP	1SCA022772R6780	18
OT315E04CFP	1SCA114535R1001	21
OT315E04CLP	1SCA106404R1001	22
OT315E04CP	1SCA022775R7150	18
OT315E12CP	1SCA022776R9910	18
OT315E13CP	1SCA022777R0410	18
OT315E33CP	1SCA118635R1001	18
OT3200E03CP	1SCA129156R1001	20
OT3200E04CP	1SCA129158R1001	20
OT3200E22CP	1SCA131131R1001	20
OT400E03CFP	1SCA106360R1001	21
OT400E03CLP	1SCA108641R1001	22
OT400E03CP	1SCA022771R8500	18
OT400E03YLP	1SCA145932R1001	24
OT400E03YP	1SCA123582R1001	24
OT400E04CFP	1SCA108650R1001	21
OT400E04CLP	1SCA106405R1001	22
OT400E04CP	1SCA022771R8680	18
OT400E04YLP	1SCA145938R1001	24
OT400E04YP	1SCA124026R1001	24
OT400E12CP	1SCA022776R9590	18
OT400E13CP	1SCA022777R0500	18
OT400E33CP	1SCA118629R1001	18
OT400U03CP	1SCA022771R2810	23
OT400U04CP	1SCA022771R2300	23
OT40F3C	1SCA104913R1001	15
OT40F4C	1SCA104934R1001	15
OT600U03CP	1SCA022785R5320	23
OT600U04CP	1SCA022785R5410	23
OT60F3C	1SCA105078R1001	23
OT60F4C	1SCA146053R1001	23
OT630E03CFP	1SCA106915R1001	21
OT630E03CP	1SCA022785R6050	18
OT630E03YP	1SCA123590R1001	24
OT630E04CFP	1SCA108753R1001	21
OT630E04CP	1SCA022785R6130	18
OT630E04YP	1SCA123592R1001	24
OT630E12CP	1SCA022785R8690	18
OT630E13CP	1SCA022785R9070	18
OT630E33CP	1SCA118652R1001	18
OT63F3C	1SCA105338R1001	15
OT63F4C	1SCA105369R1001	15
OT800E03CFP	1SCA106916R1001	21
OT800E03CP	1SCA022785R6300	18
OT800E03YP	1SCA123591R1001	24
OT800E04CFP	1SCA106945R1001	21
OT800E04CP	1SCA022785R6210	18
OT800E04YP	1SCA123593R1001	24
OT800E12CP	1SCA022785R8850	18
OT800E13CP	1SCA022785R9230	18
OT800E33CP	1SCA118649R1001	18
OT800U03CP	1SCA104031R1001	23
OT800U04CP	1SCA104036R1001	23
OT80F3C	1SCA105402R1001	15
OT80F4C	1SCA105418R1001	15
OTM1000E2CM230V	1SCA121279R1001	56
OTM1000E3CM110V	1SCA113653R1001	57
OTM1000E3CM230C	1SCA112677R1001	56
OTM1000E3CM24D	1SCA113672R1001	59
OTM1000E3CM48D	1SCA113663R1001	58
OTM1000E4CM110V	1SCA113656R1001	57
OTM1000E4CM230C	1SCA112703R1001	56
OTM1000E4CM24D	1SCA113675R1001	59
OTM1000E4CM48D	1SCA113666R1001	58
OTM100F3CMA230V	1SCA120071R1001	53
OTM100F3CMA24D	1SCA124058R1001	53
OTM100F4CMA230V	1SCA120098R1001	53
OTM100F4CMA24D	1SCA124066R1001	53
OTM1250E2CM230V	1SCA121293R1001	56
OTM1250E3CM110V	1SCA113652R1001	57
OTM1250E3CM230C	1SCA112676R1001	56
OTM1250E3CM24D	1SCA113671R1001	59
OTM1250E3CM48D	1SCA113662R1001	58
OTM1250E4CM110V	1SCA113655R1001	57
OTM1250E4CM230C	1SCA112702R1001	56
OTM1250E4CM24D	1SCA113674R1001	59
OTM1250E4CM48D	1SCA113665R1001	58
OTM125F2C20D230C	1SCA151417R1001	89
OTM125F2C21D230C	1SCA151418R1001	89
OTM125F3C20D400C	1SCA151419R1001	89
OTM125F3C21D400C	1SCA151420R1001	89
OTM125F3CMA230V	1SCA120070R1001	53
OTM125F3CMA24D	1SCA124057R1001	53
OTM125F4C20D400C	1SCA151250R1001	89
OTM125F4C21D400C	1SCA151251R1001	89
OTM125F4CB21D400C	1SCA150574R1001	89
OTM125F4CMA230V	1SCA120097R1001	53
OTM125F4CMA24D	1SCA124065R1001	53
OTM1600E2CM230V	1SCA121280R1001	56
OTM1600E3CM110V	1SCA113654R1001	57
OTM1600E3CM230C	1SCA112678R1001	56
OTM1600E3CM24D	1SCA113673R1001	59
OTM1600E3CM48D	1SCA113664R1001	58
OTM1600E4CM110V	1SCA113657R1001	57
OTM1600E4CM230C	1SCA112704R1001	56
OTM1600E4CM24D	1SCA113676R1001	59
OTM1600E4CM48D	1SCA113667R1001	58

Index

Type	Order code	Page
OTM160E2CM230V	1SCA121216R1001	55
OTM160E2WCM230V	1SCA121218R1001	55
OTM160E3CM110V	1SCA022845R8530	57
OTM160E3CM230C	1SCA022845R8610	55
OTM160E3CM24D	1SCA022845R8110	59
OTM160E3CM48D	1SCA022845R8450	58
OTM160E3WCM110V	1SCA022846R3450	57
OTM160E3WCM230C	1SCA022846R4000	55
OTM160E3WCM24D	1SCA022846R3290	59
OTM160E3WCM48D	1SCA022846R3370	58
OTM160E3YM230C	1SCA141435R1001	60
OTM160E4CM110V	1SCA022846R1080	57
OTM160E4CM230C	1SCA022848R1510	55
OTM160E4CM24D	1SCA022846R0860	59
OTM160E4CM48D	1SCA022846R0940	58
OTM160E4WCM110V	1SCA022846R7360	57
OTM160E4WCM230C	1SCA022846R7440	55
OTM160E4WCM24D	1SCA022846R7100	59
OTM160E4WCM48D	1SCA022846R7280	58
OTM160E4YM230C	1SCA141436R1001	60
OTM2000E2CM230V	1SCA121289R1001	56
OTM2000E3CM110V	1SCA113683R1001	57
OTM2000E3CM230C	1SCA112709R1001	56
OTM2000E3CM24D	1SCA113695R1001	59
OTM2000E3CM48D	1SCA113689R1001	58
OTM2000E4CM110V	1SCA113685R1001	57
OTM2000E4CM230C	1SCA112712R1001	56
OTM2000E4CM24D	1SCA113697R1001	59
OTM2000E4CM48D	1SCA113691R1001	58
OTM200E2CM230V	1SCA121209R1001	55
OTM200E2WCM230V	1SCA121294R1001	55
OTM200E3CM110V	1SCA022845R8880	57
OTM200E3CM230C	1SCA022845R8960	55
OTM200E3CM24D	1SCA022845R8290	59
OTM200E3CM48D	1SCA022845R8700	58
OTM200E3WCM110V	1SCA022846R3880	57
OTM200E3WCM230C	1SCA022846R3960	55
OTM200E3WCM24D	1SCA022846R3610	59
OTM200E3WCM48D	1SCA022846R3700	58
OTM200E3YM230C	1SCA141437R1001	60
OTM200E4CM110V	1SCA022846R1410	57
OTM200E4CM230C	1SCA022846R1590	55
OTM200E4CM24D	1SCA022846R1240	59
OTM200E4CM48D	1SCA022846R1320	58
OTM200E4WCM110V	1SCA022846R7790	57
OTM200E4WCM230C	1SCA022846R7870	55
OTM200E4WCM24D	1SCA022846R7520	59
OTM200E4WCM48D	1SCA022846R7610	58
OTM200E4YM230C	1SCA141438R1001	60
OTM2500E2CM230V	1SCA121291R1001	56
OTM2500E3CM110V	1SCA113684R1001	57
OTM2500E3CM230C	1SCA112710R1001	56
OTM2500E3CM24D	1SCA113696R1001	59
OTM2500E3CM48D	1SCA113690R1001	58
OTM2500E4CM110V	1SCA113686R1001	57
OTM2500E4CM230C	1SCA112713R1001	56
OTM2500E4CM24D	1SCA113698R1001	59
OTM2500E4CM48D	1SCA113692R1001	58
OTM250E2CM230V	1SCA121211R1001	55
OTM250E2WCM230V	1SCA121220R1001	55
OTM250E3CM110V	1SCA022845R9180	57
OTM250E3CM230C	1SCA022845R9260	55
OTM250E3CM24D	1SCA022845R8370	59
OTM250E3CM48D	1SCA022845R9000	58
OTM250E3WCM110V	1SCA022846R4690	57
OTM250E3WCM230C	1SCA022846R4770	55
OTM250E3WCM24D	1SCA022846R4420	59
OTM250E3WCM48D	1SCA022846R4510	58
OTM250E3YM230C	1SCA141439R1001	60
OTM250E4CM110V	1SCA022846R1830	57
OTM250E4CM230C	1SCA022846R1910	55
OTM250E4CM24D	1SCA022846R1670	59
OTM250E4CM48D	1SCA022846R1750	58
OTM250E4WCM110V	1SCA022846R8170	57
OTM250E4WCM230C	1SCA022846R8250	55
OTM250E4WCM24D	1SCA022846R7950	59
OTM250E4WCM48D	1SCA022846R8090	58
OTM250E4YM230C	1SCA140870R1001	60
OTM315E2CM230V	1SCA121221R1001	55
OTM315E3CM110V	1SCA022847R1120	57
OTM315E3CM230C	1SCA022847R1210	55
OTM315E3CM24D	1SCA022847R0910	59
OTM315E3CM48D	1SCA022847R1040	58
OTM315E3YM230C	1SCA141440R1001	60
OTM315E4CM110V	1SCA022847R2790	57
OTM315E4CM230C	1SCA022847R2870	55
OTM315E4CM24D	1SCA022847R2520	59
OTM315E4CM48D	1SCA022847R2610	58
OTM315E4YM230C	1SCA141441R1001	60
OTM3200E3CM230C	1SCA129240R1001	56
OTM3200E4CM230C	1SCA129242R1001	56
OTM400E2CM230V	1SCA121226R1001	55
OTM400E3CM110V	1SCA022847R1550	57
OTM400E3CM230C	1SCA022847R1630	55
OTM400E3CM24D	1SCA022847R1390	59
OTM400E3CM48D	1SCA022847R1470	58
OTM400E3YM230C	1SCA136735R1001	60
OTM400E4CM110V	1SCA022847R3170	57
OTM400E4CM230C	1SCA022847R3250	55
OTM400E4CM24D	1SCA022847R2950	59
OTM400E4CM48D	1SCA022847R3090	58
OTM400E4YM230C	1SCA136677R1001	60
OTM40F3CMA230V	1SCA120096R1001	53
OTM40F3CMA24D	1SCA124061R1001	53
OTM40F4C20D400C	1SCA151252R1001	89
OTM40F4C21D400C	1SCA151253R1001	89
OTM40F4CB21D400C	1SCA150580R1001	89
OTM40F4CMA230V	1SCA120102R1001	53
OTM40F4CMA24D	1SCA124063R1001	53
OTM630E2CM230V	1SCA121268R1001	56
OTM630E3CM110V	1SCA022873R1050	57
OTM630E3CM230C	1SCA103567R1001	56
OTM630E3CM24D	1SCA022873R1210	59
OTM630E3CM48D	1SCA022873R1300	58
OTM630E3YM230C	1SCA136615R1001	60
OTM630E4CM110V	1SCA022873R1810	57
OTM630E4CM230C	1SCA022873R1990	56
OTM630E4CM24D	1SCA022873R2020	59
OTM630E4CM48D	1SCA022873R2110	58
OTM630E4YM230C	1SCA136613R1001	60
OTM63F2C20D230C	1SCA151421R1001	89
OTM63F2C21D230C	1SCA151422R1001	89

Index

Type	Order code	Page
OTM63F3C20D400C	1SCA151423R1001	89
OTM63F3C21D400C	1SCA151424R1001	89
OTM63F3CMA230V	1SCA120095R1001	53
OTM63F3CMA24D	1SCA124060R1001	53
OTM63F4C20D400C	1SCA151254R1001	89
OTM63F4C21D400C	1SCA151255R1001	89
OTM63F4CB21D400C	1SCA150586R1001	89
OTM63F4CMA230V	1SCA120101R1001	53
OTM63F4CMA24D	1SCA124064R1001	53
OTM800E2CM230V	1SCA121270R1001	56
OTM800E3CM110V	1SCA022872R5750	57
OTM800E3CM230C	1SCA103570R1001	56
OTM800E3CM24D	1SCA022872R5910	59
OTM800E3CM48D	1SCA022872R6050	58
OTM800E3YM230C	1SCA136616R1001	60
OTM800E4CM110V	1SCA022872R8260	57
OTM800E4CM230C	1SCA022872R8340	56
OTM800E4CM24D	1SCA022872R8420	59
OTM800E4CM48D	1SCA022872R8510	58
OTM800E4YM230C	1SCA136614R1001	60
OTM80F3CMA230V	1SCA120093R1001	53
OTM80F3CMA24D	1SCA124059R1001	53
OTM80F4CMA230V	1SCA120100R1001	53
OTM80F4CMA24D	1SCA124062R1001	53
OTPS125FP	1SCA105099R1001	40
OTPS40FPN1	1SCA105001R1001	40
OTPS40FPN2	1SCA105000R1001	40
OTPS80FP	1SCA105461R1001	40
OTS125T1	1SCA022379R9760	37
OTS125T1	1SCA022379R9760	91
OTS125T3	1SCA022379R9680	37
OTS125T3	1SCA022379R9680	69
OTS125T3	1SCA022379R9680	91
OTS1600G1L/3	1SCA022871R9510	37
OTS1600G1L/3	1SCA022871R9510	69
OTS1600G1L/4	1SCA022871R9780	37
OTS1600G1L/4	1SCA022871R9780	69
OTS1600G1S/3	1SCA022871R9600	37
OTS1600G1S/3	1SCA022871R9600	69
OTS1600G1S/4	1SCA022871R9860	37
OTS1600G1S/4	1SCA022871R9860	69
OTS2500G1L/3	1SCA107261R1001	37
OTS2500G1L/3	1SCA107261R1001	69
OTS2500G1L/4	1SCA107262R1001	37
OTS2500G1L/4	1SCA107262R1001	69
OTS2500G1S/3	1SCA107260R1001	37
OTS2500G1S/3	1SCA107260R1001	69
OTS2500G1S/4	1SCA107271R1001	37
OTS2500G1S/4	1SCA107271R1001	69
OTS250G1L/3	1SCA022731R8150	37
OTS250G1L/3	1SCA022731R8150	69
OTS250G1L/4	1SCA022731R8230	37
OTS250G1L/4	1SCA022731R8230	69
OTS250G1S/3	1SCA022731R8310	37
OTS250G1S/3	1SCA022731R8310	69
OTS250G1S/4	1SCA022731R8400	37
OTS250G1S/4	1SCA022731R8400	69
OTS4000G1L/3	1SCA129042R1001	37
OTS4000G1L/3	1SCA129042R1001	69
OTS4000G1L/4	1SCA129043R1001	37
OTS4000G1L/4	1SCA129043R1001	69

Type	Order code	Page
OTS4000G1S/3	1SCA129044R1001	37
OTS4000G1S/3	1SCA129044R1001	69
OTS4000G1S/4	1SCA129045R1001	37
OTS4000G1S/4	1SCA129045R1001	69
OTS400G1L/3	1SCA022736R8840	37
OTS400G1L/3	1SCA022736R8840	69
OTS400G1L/4	1SCA022736R9490	37
OTS400G1L/4	1SCA022736R9490	69
OTS400G1S/3	1SCA022736R9060	37
OTS400G1S/3	1SCA022736R9060	69
OTS400G1S/4	1SCA022736R9650	37
OTS400G1S/4	1SCA022736R9650	69
OTS40T1	1SCA105314R1001	37
OTS40T1	1SCA105314R1001	37
OTS40T3	1SCA105317R1001	37
OTS63T1	1SCA022353R6910	37
OTS63T3	1SCA022353R6750	37
OTS800G1L/3	1SCA022776R7890	37
OTS800G1L/3	1SCA022776R7890	69
OTS800G1L/4	1SCA022776R7970	37
OTS800G1L/4	1SCA022776R7970	69
OTS800G1S/3	1SCA022776R8190	37
OTS800G1S/3	1SCA022776R8190	69
OTS800G1S/4	1SCA022776R8270	37
OTS800G1S/4	1SCA022776R8270	69
OTV1000ECK	1SCA107481R1001	34
OTV1000ECMK	1SCA111301R1001	68
OTV250ECFK	1SCA113141R1001	34
OTV250ECK	1SCA022783R0090	34
OTV250ECLK	1SCA113137R1001	34
OTV250ECMK	1SCA022804R0570	68
OTV400ECFK	1SCA113147R1001	34
OTV400ECK	1SCA022783R0170	34
OTV400ECLK	1SCA113143R1001	34
OTV400ECMK	1SCA022843R2900	68
OTV800ECFK	1SCA113151R1001	34
OTV800ECK	1SCA022797R2470	34
OTV800ECMK	1SCA022804R3410	68
OTVS0	1SCA117524R1001	68
OTVS0	1SCA117524R1001	90
OTVS1	1SCA111413R1001	68
OTVS2	1SCA111414R1001	68
OTZC13	1SCA022767R6910	17
OTZC13	1SCA022767R6910	40
OTZC13	1SCA022767R6910	71
OTZC14	1SCA022767R7040	17
OTZC14	1SCA022767R7040	40
OTZC14	1SCA022767R7040	60
OTZC14	1SCA022767R7040	71
OTZC23	1SCA022767R7120	18
OTZC23	1SCA022767R7120	40
OTZC23	1SCA022767R7120	60
OTZC23	1SCA022767R7120	71
OTZC24	1SCA022767R7210	18
OTZC24	1SCA022767R7210	40
OTZC24	1SCA022767R7210	60
OTZC24	1SCA022767R7210	71
OTZC33	1SCA022767R7020	18
OTZC33	1SCA022785R7020	40
OTZC33	1SCA022785R7020	60
OTZC33	1SCA022785R7020	71

Index

Type	Order code	Page
OTZC34	1SCA022767R7110	18
OTZC34	1SCA022785R7110	40
OTZC34	1SCA022785R7110	60
OTZC34	1SCA022785R7110	71
OTZC43	1SCA022868R0710	40
OTZC43	1SCA022868R0710	71
OTZC44	1SCA022868R0800	20
OTZC44	1SCA022868R0800	40
OTZC44	1SCA022868R0800	71
OTZC53	1SCA022868R0980	40
OTZC53	1SCA022868R0980	71
OTZC54	1SCA022767R1010	20
OTZC54	1SCA022868R1010	40
OTZC54	1SCA022868R1010	71
OTZC63	1SCA022868R1100	40
OTZC63	1SCA022868R1100	71
OTZC64	1SCA022868R1360	20
OTZC64	1SCA022868R1360	40
OTZC64	1SCA022868R1360	71
OTZC73	1SCA128843R1001	40
OTZC73	1SCA128843R1001	71
OTZC74	1SCA128844R1001	20
OTZC74	1SCA128844R1001	40
OTZC74	1SCA128844R1001	71
OTZR1	1SCA100352R1001	40
OTZR1	1SCA100352R1001	71
OTZR2	1SCA104647R1001	40
OTZR2	1SCA104647R1001	71
OTZR3	1SCA100355R1001	40
OTZR3	1SCA100355R1001	71
OXP12X107	1SCA022029R9750	36
OXP12X148	1SCA022658R5570	36
OXP12X148	1SCA022658R5570	36
OXP12X166	1SCA022325R7100	36
OXP12X166	1SCA022325R7100	36
OXP12X185	1SCA022325R6710	36
OXP12X185	1SCA022325R6710	36
OXP12X185	1SCA022325R6710	36
OXP12X250	1SCA022325R6980	36
OXP12X250	1SCA022325R6980	36
OXP12X250	1SCA022325R6980	36
OXP12X280	1SCA022137R5140	36
OXP12X325	1SCA022042R5810	36
OXP12X325	1SCA022042R5810	36
OXP12X325	1SCA022042R5810	36
OXP12X395	1SCA022042R5990	36
OXP12X395	1SCA022042R5990	36
OXP12X395	1SCA022042R5990	36
OXP12X465	1SCA022042R6020	36
OXP12X465	1SCA022042R6020	36
OXP12X465	1SCA022042R6020	36
OXP6/12x161C	1SCA111724R1001	36
OXP6X130	1SCA022057R0570	36
OXP6X150	1SCA022295R5600	36
OXP6X161	1SCA022067R1760	36
OXP6X170	1SCA108224R1001	36
OXP6X210	1SCA022295R6080	36
OXP6X265	1SCA108225R1001	36
OXP6X290	1SCA022042R6370	36
OXP6X360	1SCA022042R6530	36
OXP6X400	1SCA108226R1001	36

Type	Order code	Page
OXP6X90	1SCA022064R1180	36
OXS6X105	1SCA108043R1001	36
OXS6X120	1SCA101654R1001	36
OXS6X130	1SCA101655R1001	36
OXS6X85	1SCA101647R1001	36
OZXA32	1SCA022683R4110	15
OZXA32	1SCA022683R4110	38
OZXA33	1SCA022685R0310	15
OZXA33	1SCA022685R0310	38
OZXA38	1SCA022785R2140	15
OZXA38	1SCA022785R2140	38
OZXA39	1SCA022790R3820	15
OZXA39	1SCA022790R3820	38
OZXA40	1SCA022790R3910	15
OZXA40	1SCA022790R3910	38
OZXA41	1SCA022790R4040	15
OZXA41	1SCA022790R4040	38
OZXB1L	1SCA022169R2030	39
OZXB1L/1	1SCA022194R0030	39
OZXB2	1SCA022119R7610	39
OZXB2/1	1SCA022194R0200	39
OZXB2L	1SCA022158R7750	39
OZXB2L	1SCA022158R7750	39
OZXB2L/1	1SCA022194R0460	39
OZXB2L/1	1SCA022194R0460	39
OZXB3	1SCA022136R8100	39
OZXB3/1	1SCA022194R0620	39
OZXB4	1SCA022137R4760	39
OZXB4/1	1SCA022194R0890	39
OZXB7	1SCA022185R0040	39
OZXB7/1	1SCA022194R1430	39
OZXB7L	1SCA022185R7130	39
OZXB7L/1	1SCA022194R1600	39
OZXB8	1SCA022744R1510	39
OZXB8	1SCA022744R1510	39
OZXB8/1	1SCA022744R1600	39
OZXB8/1	1SCA022744R1600	39
OZXB9	1SCA022750R3210	39
OZXB9	1SCA022750R3210	39
OZXB9/1	1SCA022750R3300	39
OZXB9/1	1SCA022750R3300	39
OZXL1	1SCA022439R6770	39
OZXL1	1SCA022439R6770	91
OZXT1	1SCA022469R6310	39
OZXT1	1SCA022469R6310	39
OZXT1	1SCA022469R6310	70
OZXT1	1SCA022469R6310	91
OZXT2	1SCA022620R7200	39
OZXT2	1SCA022620R7200	70
OZXT2	1SCA022620R7200	91
OZXT3	1SCA022639R0720	39
OZXT3	1SCA022639R0720	70
OZXT3	1SCA022639R0720	91
OZXT6	1SCA122537R1001	53
OZXT6	1SCA122537R1001	70
OZXT6	1SCA122537R1001	91
PB100 low	1SDA054970R1	38
PB100 low	1SDA054971R1	38
PB100 low	1SDA054970R1	38
PB100 low	1SDA054971R1	38
PB100 low	1SDA054970R1	38

Index

Type	Order code	Page
PB100 low	1SDA054971R1	38
PB100 low	1SDA054970R1	60
PB100 low	1SDA054971R1	60
PB100 low	1SDA054970R1	60
PB100 low	1SDA054970R1	70
PB100 low	1SDA054971R1	70
PB100 low	1SDA054970R1	70
PB100 low	1SDA054971R1	70
PB100 low	1SDA054970R1	70
PB100 low	1SDA054971R1	70
PB200 high	1SDA054972R1	38
PB200 high	1SDA054973R1	38
PB200 high	1SDA054972R1	38
PB200 high	1SDA054973R1	38
PB200 high	1SDA054972R1	38
PB200 high	1SDA054973R1	38
PB200 high	1SDA054972R1	60
PB200 high	1SDA054973R1	60
PB200 high	1SDA054972R1	60
PB200 high	1SDA054972R1	70
PB200 high	1SDA054973R1	70
PB200 high	1SDA054972R1	70
PB200 high	1SDA054973R1	70
PB200 high	1SDA054972R1	70
PB200 high	1SDA054973R1	70

ABB Oy
Smart Power
P.O. Box 622
FI-65101 Vaasa, Finland

You can find the address of your local sales organization on the ABB home page

http://new.abb.com/low-voltage

We reserve the right to make technical changes or modify the contents of this document without prior notice. ABB does not accept any responsibility whatsoever for potential errors or possible lack of information in this document.

We reserve all rights in this document and in the subject matter and illustrations contained therein. Any reproduction, disclosure to third parties or utilization of its contents – in whole or in parts – is forbidden without prior written consent of ABB.

Copyright© 2021 ABB - All rights reserved

1SCC303003C0201 - 21-11