IL5022

Inductive sensor

ILB30,8-BPKG/2M PVC

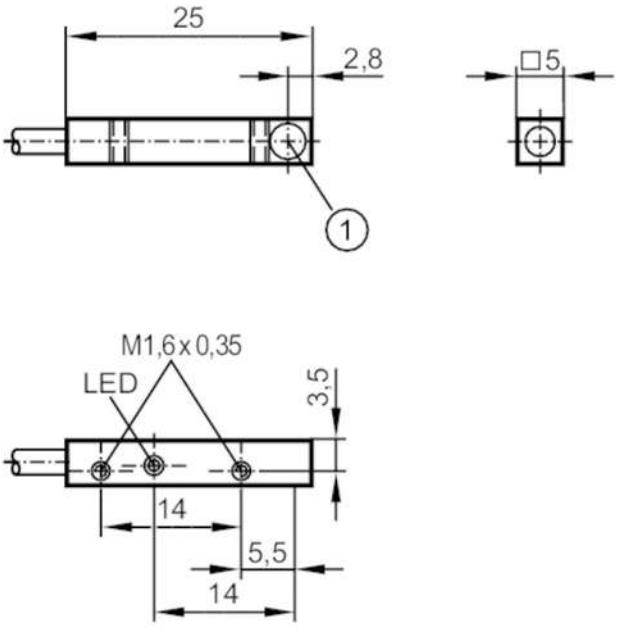

1 sensing face

Product characteristics		
Electrical design		PNP
Output function		normally open
Sensing range	[mm]	0.8
Housing		rectangular
Dimensions	[mm]	25 x 5 x 5
Electrical data		
Operating voltage	[V]	10...30 DC
Current consumption	[mA]	10; (24 V)
Reverse polarity protection		yes
Outputs		
Electrical design		PNP
Output function		normally open
Max. voltage drop switching output DC	[V]	1
Permanent current rating of switching output DC	[mA]	100
Switching frequency DC	[Hz]	1000
Short-circuit protection		yes
Type of short-circuit protection		pulsed
Overload protection		no
Detection zone		
Sensing range	[mm]	0.8
Real sensing range Sr	[mm]	0.8 ± 10 %

IL5022

Inductive sensor

ILB30,8-BPKG/2M PVC

Operating distance	[mm]	0...0.65	
Accuracy / deviations			
Correction factor		steel: 1 / stainless steel: 0.7 / brass: 0.5 / aluminium: 0.4 / copper: 0.3	
Hysteresis	[% of Sr]	< 15	
Switch point drift	[% of Sr]	-10...10	
Operating conditions			
Ambient temperature	[°C]	-25...70	
Protection		IP 67	
Tests / approvals			
EMC		EN 60947-5-2	
		EN 55011	class B
MTTF	[years]	640	
UL approval		Ta	0...40 °C
		power supply	Class 2
		File number UL	E174191
Mechanical data			
Weight	[g]	54.5	
Housing		rectangular	
Mounting		flush mountable	
Dimensions	[mm]	25 x 5 x 5	
Materials		housing: aluminium anodised; sensing face: POM	
Displays / operating elements			
Display		switching status	1 x LED, red
Accessories			
Items supplied		screws: 2	
Remarks			
Pack quantity		1 pcs.	

IL5022

Inductive sensor

ILB30,8-BPKG/2M PVC

Electrical connection

Cable: 2 m, PVC; 3 x 0.14 mm²

Connection

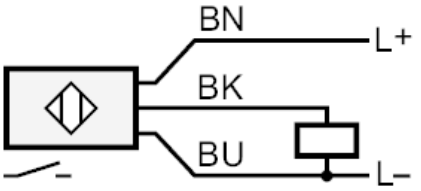

	Core colours :
BK =	black
BN =	brown
BU =	blue