RACON 12 S, SMT, 2.5 ± 0.6 N, 1 NO



fields of application

- Measurement-control-regulation
- Mechanical and system engineering
- Automotive
- Electro-medical

special features

- Gold contacts, reliable switching with low currents
- Special tactile feedback
- Different operating forces
- Variable overall heights due to plunger
- Terminal technology: SMT or THT
- Traceability through product identification
- sealable (tested media see Downloads)

CE

description

Our top-quality RACON 12 tactile switches – in the dimensions 12 x 12 mm – feature an unmistakeable click, high switching reliability, a sealed contact system and castability. That has made RACON the standard in many industries. Whether for automotive applications, systems with keycaps, or membrane keyboards, RACON impresses in the THT or SMT versions – for your application too.

RACON 12 tactile switches can be arranged individually, in rows or as key blocks. When used beneath membrane overlays, the RACON key switches should be combined with plungers. Suitable for the most important soldering techniques.

Soldering bath for THT versions
Reflow soldering for SMT versions
Vapor phase soldering for SMT versions
Manual soldering
Processing of the SMT designs with SMT automatic assembly machines
IMDS entry

technical data

general

Color	blue
Operating temperature, min.	-40 °C
Operating temperature, max.	90 °C
Storage temperature, min.	-50 °C
Storage temperature, max.	90 °C
illuminated	No
Soldering	Reflow

direct links

- RAFI eCatalog

The information in this data sheet only contains general descriptions and / or performance features, which may not apply precisely as described to the respective application, and which my change due to further product enhancements. The technical data, illustrations and other information about our products are the mere results of individual technical testing. These descriptions and other product features are only binding if they expressly agreed upon at the time of the conclusion of a binding contract. In all other cases, we reserve the right to make technical changes as well as changes of availability. Pictures and other graphic illustrations are approximations only. All product names may be trademarks or brand names of the RAFI Group or any other sub-supplier of RAFI. The use of such by any third parties for their own purposes may infringe the rights of the respective entity holding those rights.

RAFI GmbH & Co. KG

Ravensburger Str. 128-134
88276 Berg / Ravensburg
Germany
www.rafi-group.com,
info.headquarters@rafi-group.com

Solder heat resistance according to standard	DIN EN 60068-2-58
Packaging	Blister
Packaging unit	750 pcs.
net weight	1.5 g
Operating life	1,000,000 cycles
B10	1,300,000 cycles
Degree of protection, front side, according to DIN EN 60529	IP54 IPx7
Degree of protection, rear side, according to DIN EN 60529	IP54 IPx7
MSL Moisture Sensitivity Level	1
Corrosive gas testing according to standard	Yes
MOQ order	750 pcs.
RoHS compliant	Yes
REACH compliant	Yes
Component material	Elastomer
Product code	2C

mounting diameters

Outside dimension, length	12 mm
Outside dimension, width	12 mm
Outside dimension, height	$4.95^{\pm 0.1}$ mm
Installation height	$4.95^{\pm 0.1}$ mm
Grid, min.	12.5 x 15.24 mm

mechanical data

Actuation function	momentary contact function
Operating force, max.	8 N
Operating force, min.	2.5 ± 0.6 N
Switching travel	0.55^{±0.1} mm
Contact function	1 NO
Contact system	Snap-action contact SPST - Single Pole Single Throw
Contact material	Gold
Solderability	Yes
Terminal on the rear	SMT

electrical data

Rated voltage, min.	0.02 V
Rated voltage, max.	35 V
Rated current, min.	0.00001 A
Rated current, max.	0.1 A
Rated power, max.	1 W

The information in this data sheet only contains general descriptions and / or performance features, which may not apply precisely as described to the respective application, and which my change due to further product enhancements. The technical data, illustrations and other information about our products are the mere results of individual technical testing. These descriptions and other product features are only binding if they expressly agreed upon at the time of the conclusion of a binding contract. In all other cases, we reserve the right to make technical changes as well as changes of availability. Pictures and other graphic illustrations are approximations only. All product names may be trademarks or brand names of the RAFI Group or any other sub-supplier of RAFI. The use of such by any third parties for their own purposes may infringe the rights of the respective entity holding those rights.

RAFI GmbH & Co. KG

Ravensburger Str. 128-134
88276 Berg / Ravensburg
Germany
www.rafi-group.com,
info.headquarters@rafi-group.com

drawings

Dimensioned drawing

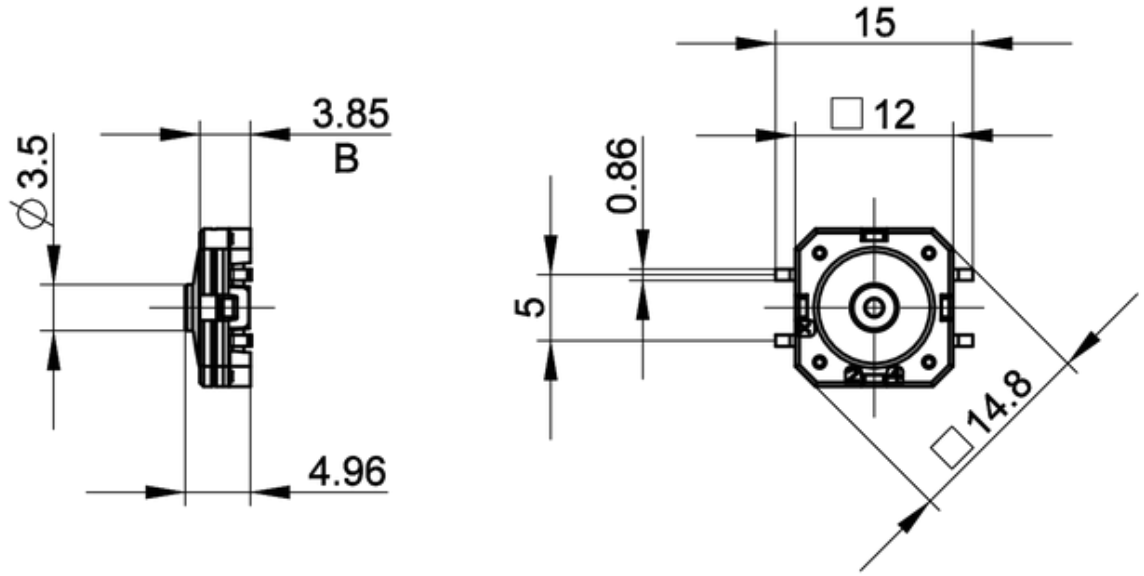

System drawing

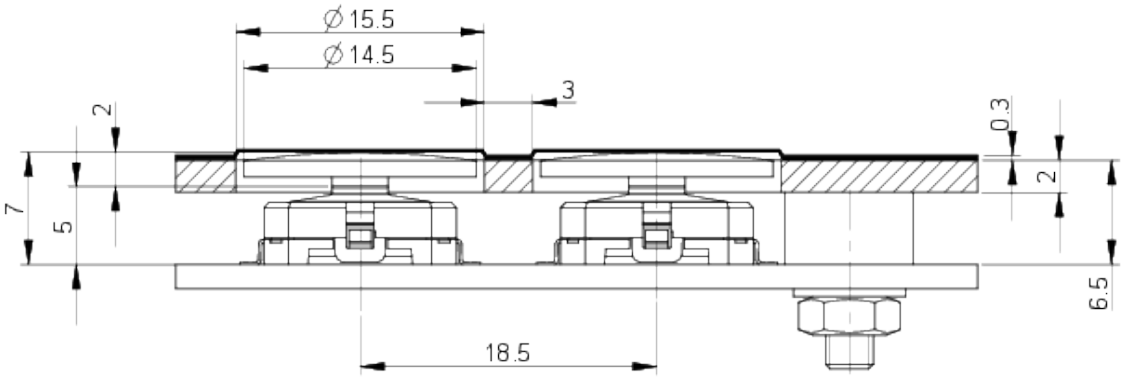

The information in this data sheet only contains general descriptions and / or performance features, which may not apply precisely as described to the respective application, and which my change due to further product enhancements. The technical data, illustrations and other information about our products are the mere results of individual technical testing. These descriptions and other product features are only binding if they expressly agreed upon at the time of the conclusion of a binding contract. In all other cases, we reserve the right to make technical changes as well as changes of availability. Pictures and other graphic illustrations are approximations only. All product names may be trademarks or brand names of the RAFI Group or any other sub-supplier of RAFI. The use of such by any third parties for their own purposes may infringe the rights of the respective entity holding those rights.

RAFI GmbH & Co. KG

Ravensburger Str. 128-134
88276 Berg / Ravensburg
Germany
www.rafi-group.com,
info.headquarters@rafi-group.com

System drawing

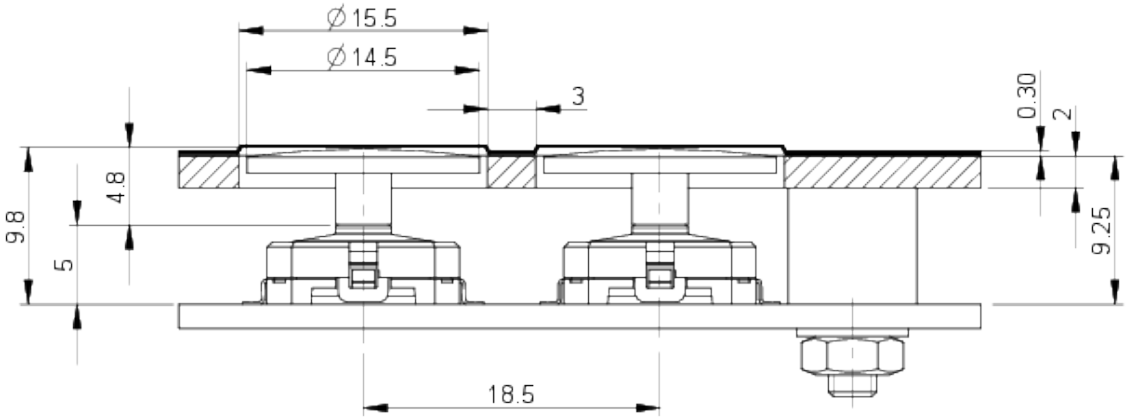

System drawing

SMT gullwing connection

Recommended: Embossing: 0.35 mm
Adhesive thickness: 0.15 mm

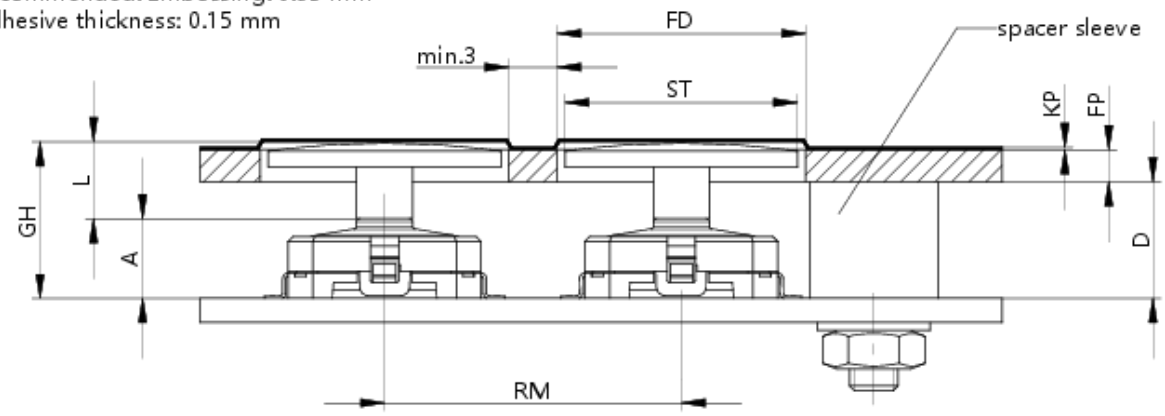

The information in this data sheet only contains general descriptions and / or performance features, which may not apply precisely as described to the respective application, and which my change due to further product enhancements. The technical data, illustrations and other information about our products are the mere results of individual technical testing. These descriptions and other product features are only binding if they expressly agreed upon at the time of the conclusion of a binding contract. In all other cases, we reserve the right to make technical changes as well as changes of availability. Pictures and other graphic illustrations are approximations only. All product names may be trademarks or brand names of the RAFI Group or any other sub-supplier of RAFI. The use of such by any third parties for their own purposes may infringe the rights of the respective entity holding those rights.

RAFI GmbH & Co. KG

Ravensburger Str. 128-134
88276 Berg / Ravensburg
Germany
www.rafi-group.com,
info.headquarters@rafi-group.com

PCB drawing

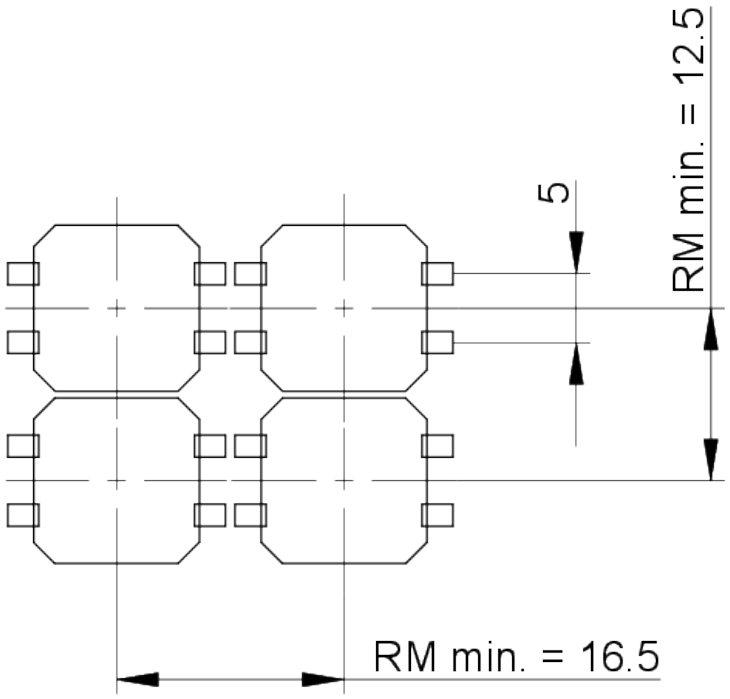

PCB drawing

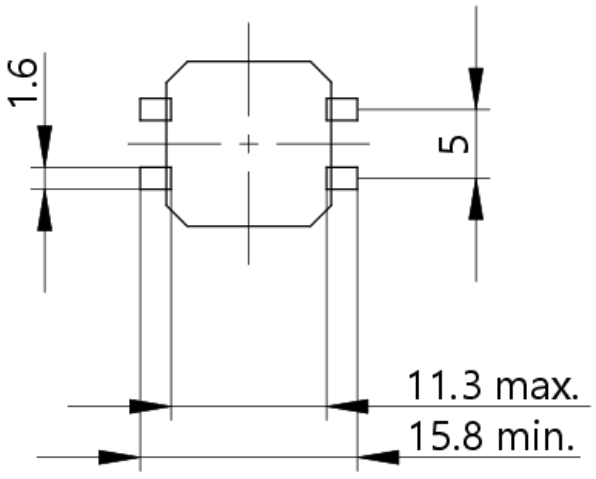

PCB-Pad
component side

The information in this data sheet only contains general descriptions and / or performance features, which may not apply precisely as described to the respective application, and which my change due to further product enhancements. The technical data, illustrations and other information about our products are the mere results of individual technical testing. These descriptions and other product features are only binding if they expressly agreed upon at the time of the conclusion of a binding contract. In all other cases, we reserve the right to make technical changes as well as changes of availability. Pictures and other graphic illustrations are approximations only. All product names may be trademarks or brand names of the RAFI Group or any other sub-supplier of RAFI. The use of such by any third parties for their own purposes may infringe the rights of the respective entity holding those rights.

RAFI GmbH & Co. KG

Ravensburger Str. 128-134
88276 Berg / Ravensburg
Germany
www.rafi-group.com,
info.headquarters@rafi-group.com

Schematic diagram

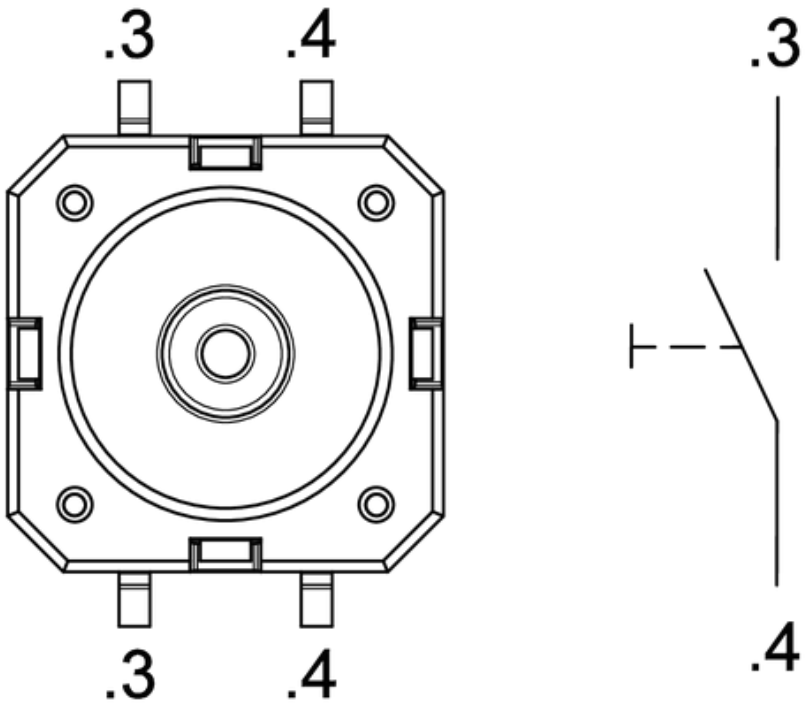

Product labeling drawing

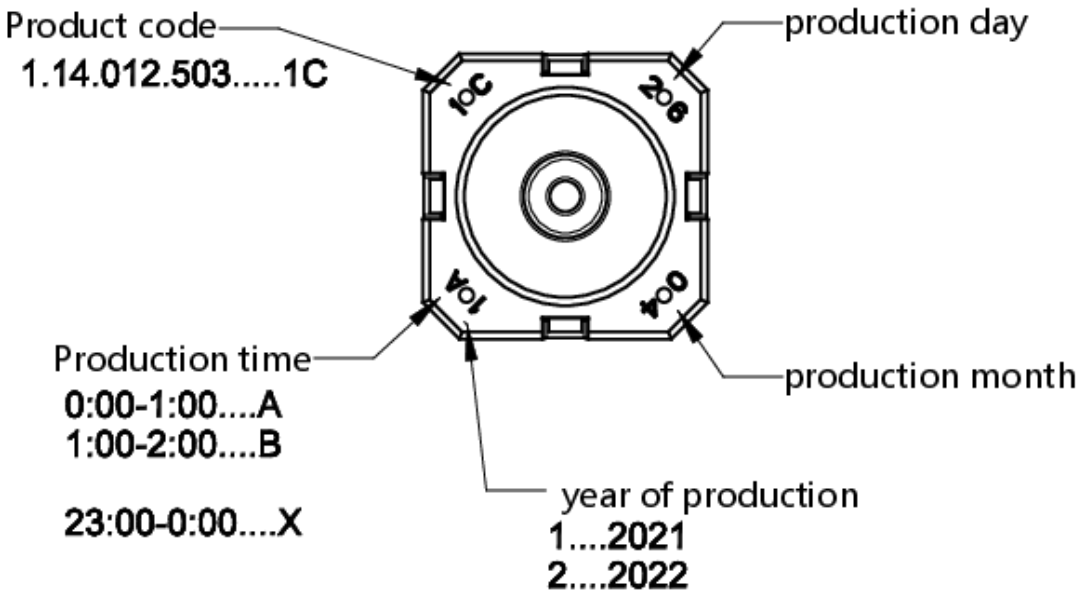

The information in this data sheet only contains general descriptions and / or performance features, which may not apply precisely as described to the respective application, and which my change due to further product enhancements. The technical data, illustrations and other information about our products are the mere results of individual technical testing. These descriptions and other product features are only binding if they expressly agreed upon at the time of the conclusion of a binding contract. In all other cases, we reserve the right to make technical changes as well as changes of availability. Pictures and other graphic illustrations are approximations only. All product names may be trademarks or brand names of the RAFI Group or any other sub-supplier of RAFI. The use of such by any third parties for their own purposes may infringe the rights of the respective entity holding those rights.

RAFI GmbH & Co. KG

Ravensburger Str. 128-134
88276 Berg / Ravensburg
Germany
www.rafi-group.com,
info.headquarters@rafi-group.com

1.14.012.603/0000

Packaging drawing

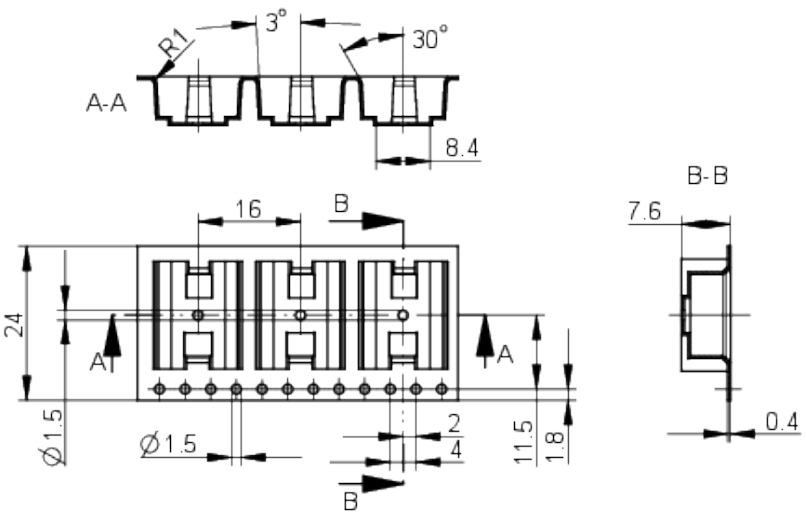

The information in this data sheet only contains general descriptions and / or performance features, which may not apply precisely as described to the respective application, and which my change due to further product enhancements. The technical data, illustrations and other information about our products are the mere results of individual technical testing. These descriptions and other product features are only binding if they expressly agreed upon at the time of the conclusion of a binding contract. In all other cases, we reserve the right to make technical changes as well as changes of availability. Pictures and other graphic illustrations are approximations only. All product names may be trademarks or brand names of the RAFI Group or any other sub-supplier of RAFI. The use of such by any third parties for their own purposes may infringe the rights of the respective entity holding those rights.

RAFI GmbH & Co. KG

Ravensburger Str. 128-134
88276 Berg / Ravensburg
Germany
www.rafi-group.com,
info.headquarters@rafi-group.com

mounting

RAFI soldering profile for ROHS compliant reflow components

Publication date: October 7, 2021

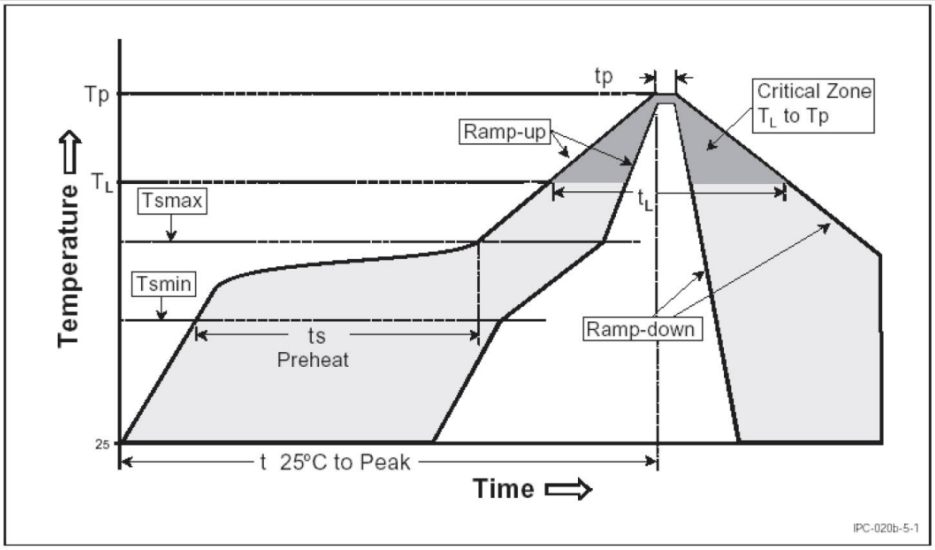

Parameter	RAFI values
Gradient (T_L to T_P)	max. 3°C / s
Preheating zone Minimum temperature (T_{smin}) Maximum temperature (T_{smax}) Time (from min. to max.) (ts)	 150°C 200°C 60 - 120 s
Gradient (T_{smax} to T_L)	max. 3°C / s
Time over melting temperature (T_L) time (t_L)	 217°C 60 – 150 s
Peak temperature (T_P)	max. 260°C (+0°C)
Time within peak temperature – 5°C (tp)	20-40 s
Gradient ramp down	max. 6°C / s
Time difference from 25°C to peak temperature	max. 8 minutes

The reflow soldering profile is based on the definition of Jedec J-STD-020D.

The information in this sheet only contains general descriptions and / or performance features, which may not apply precisely as described to the respective application, and which my change due to further product enhancements. The technical data, illustrations and other information about our products are the mere results of individual technical testing. These descriptions and other product features are only binding if they expressly agreed upon at the time of the conclusion of a binding contract. In all other cases, we reserve the right to make technical changes as well as changes of availability. Pictures and other graphic illustrations are approximations only. All product names may be trademarks or brand names of the RAFI Group or any other sub-supplier of RAFI. The use of such by any third parties for their own purposes may infringe the rights of the respective entity holding those rights. Subject to change and errors excepted. Details about delivery times and availability are noncommittal and have no legal force.

RAFI GmbH & Co. KG
Ravensburger Str. 128-134, 88276 Berg / Ravensburg
GERMANY – www.rafi-group.com

The information in this data sheet only contains general descriptions and / or performance features, which may not apply precisely as described to the respective application, and which my change due to further product enhancements. The technical data, illustrations and other information about our products are the mere results of individual technical testing. These descriptions and other product features are only binding if they expressly agreed upon at the time of the conclusion of a binding contract. In all other cases, we reserve the right to make technical changes as well as changes of availability. Pictures and other graphic illustrations are approximations only. All product names may be trademarks or brand names of the RAFI Group or any other sub-supplier of RAFI. The use of such by any third parties for their own purposes may infringe the rights of the respective entity holding those rights.

RAFI GmbH & Co. KG

Ravensburger Str. 128-134
88276 Berg / Ravensburg
Germany
www.rafi-group.com,
info.headquarters@rafi-group.com

Medium Robust Electronics

Publication date: July 25, 2022

RACON 12 S

Valid for all variants RACON 12 S, 1.14.012.5XX-9XX

Approved potting compounds

- **WEVO-CHEMIE GmbH** — **WEVOPUR 7210 FL/WEVONAT 507**
  WEVOPUR PD4431 FL/WEVONAT 300
- **STOCKMAIER URETHANES GmbH & Co.KG** — **Stobicast® L768.16 Polyol/Isocyanat**

Important note
Maximum potting height B must not be exceeded.

Approved circuit board protection

- **Lackwerke Peters GmbH & Co.KG** — **ELPEGUARD® SL 1307**

Important note
If the tactile switch is completely painted, the paint may peel off the elastomer of the tactile switch during the first few actuations. Press the tactile switch only after the paint has hardened.
We recommend leaving out the elastomer area when painting to prevent detachment.

- **TIEFCO Coating Company** — **3M™ Novec™ 1700**

Important note
After coating, the contact resistance can increase. After repeated actuation, the contact resistance drops again under 100 mΩ.

General remark:
The potting, varnish and nano medium must be used in accordance with the manufacturer's technical data sheet. Actuation of the tactile switch only after the potting compound, varnish and nano medium has hardened.

Other potting compounds and processes for printed circuit board protection on request.

The information in this sheet only contains general descriptions and / or performance features, which may not apply precisely as described to the respective application, and which my change due to further product enhancements. The technical data, illustrations and other information about our products are the mere results of individual technical testing. These descriptions and other product features are only binding if they expressly agreed upon at the time of the conclusion of a binding contract. In all other cases, we reserve the right to make technical changes as well as changes of availability. Pictures and other graphic illustrations are approximations only. All product names may be trademarks or brand names of the RAFI Group or any other sub-supplier of RAFI. The use of such by any third parties for their own purposes may infringe the rights of the respective entity holding those rights. Subject to change and errors excepted. Details about delivery times and availability are noncommittal and have no legal force.

RAFI GmbH & Co. KG
Ravensburger Str. 128-134, 88276 Berg / Ravensburg
GERMANY – www.rafi-group.com

The information in this data sheet only contains general descriptions and / or performance features, which may not apply precisely as described to the respective application, and which my change due to further product enhancements. The technical data, illustrations and other information about our products are the mere results of individual technical testing. These descriptions and other product features are only binding if they expressly agreed upon at the time of the conclusion of a binding contract. In all other cases, we reserve the right to make technical changes as well as changes of availability. Pictures and other graphic illustrations are approximations only. All product names may be trademarks or brand names of the RAFI Group or any other sub-supplier of RAFI. The use of such by any third parties for their own purposes may infringe the rights of the respective entity holding those rights.

RAFI GmbH & Co. KG

Ravensburger Str. 128-134
88276 Berg / Ravensburg
Germany
www.rafi-group.com,
info.headquarters@rafi-group.com