

ISOM K-40

Insulation monitoring device

for power networks or control/command circuits



isom_486_a_front

ISOM K-40

Configuration with Easy Config System.

Function

The **ISOM K-40** insulation monitoring device monitors the insulation level of medium-interference power networks in IT neutral arrangment. It is also designed for monitoring control-command networks.

Advantages

Alert log
The device records and timestamps current or completed alarms and events.

Quick Access button
The device has a dedicated button to quickly and easily navigate between the main operating screens.

AC current measurement
The device has a sensor input to monitor the single-phase current.

Temperature monitoring
The device has a temperature monitoring function (emits an alert if the preset threshold is exceeded).

Deactivation function
You can configure the temperature input when the IMD is in exclusion mode, to manage network couplings.

Modbus® communication
The device has an RS485 connection with Modbus protocol (speed up to 115,200 bauds).

Recess-mounted box
Because of the design of housing, you can recess-mount the device or modularly integrate it on a DIN rail.

Applications

These IMDs can be used for multiple applications:
- Universal use in industry
- Monitoring AC, DC and combined networks (up to 150 µF of leakage)
- Coupled networks
- Insulation monitoring on AC, combined or DC circuits which may have symmetrical faults (PLC circuits, rectifiers...).

ISOM K-40 is intended for circuits where the signalling of continuous symmetrical faults is imperative and is suitable for higher leakage capacity AC control circuits (e.g. with an EMC filter or numerous PLC inputs).

Note: In accordance with IEC 61557-8 and EN 61557-8, the use of IMDs capable of detecting symmetrical defects is mandatory for low-voltage DC circuits (> 120 VDC regular or 140 VDC peak).

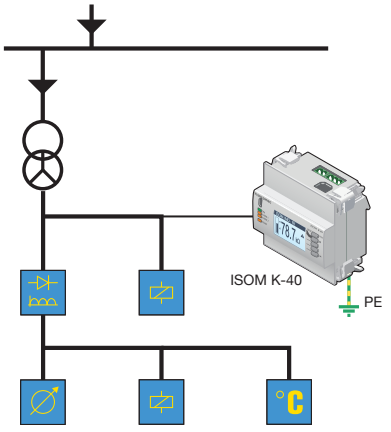

isom_510_a_1_x_cat.ai

Typical monitored loads: rectifiers, relays, sensors and probes.

The solution for

- Industries
- Energy production
- Infrastructures



Strong points

- Alert log
- Quick Access button
- AC current measurement
- Temperature monitoring
- Deactivation function
- Modbus® communication
- Recess-mounted box

Conformity to standards

- IEC 61557-8
- ISO 14025

Need the help of an expert?

Socomec offers a range of services to help you optimise your electrical installations and increase efficiency:
- Startup
- Checking the insulation monitoring architecture (NFC 15100)
- Fault-finding
- Training on the handheld fault location tool, ISOM PS-62

To find out more, ask your Socomec representative.

socomec Innovative Power Solutions

ISOM K-40

Insulation monitoring device

for power networks or control/command circuits

Front panel

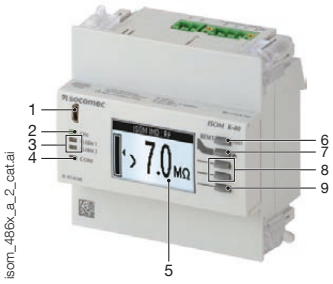

isom_486x_a_2_cat.ai

1. USB port for configuration.
2. ON indicator. Lights up when the device is active.
3. ALARM 1 and 2 indicators. Light up when the preset thresholds for Alert 1 or Alert 2 are reached.
4. COM indicator. Flashes when the communication bus is active.
5. Backlit graphic display.
6. TEST/RESET button. Starts the autotest (long press) and resets alerts (short press).
7. Quick-Access button (short press) - HOME to main menu (long press).
8. Hotkeys.
9. OK buttons (short press) - Back (long press).

Dimensions (mm)

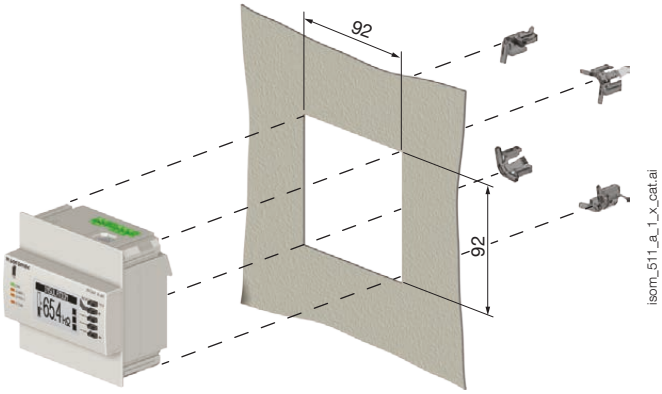

isom_511_a_1_x_cat.ai

Terminals and connections

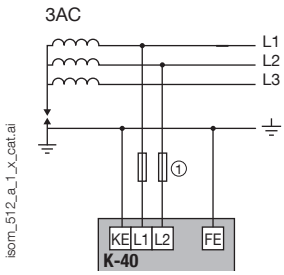

isom_512_a_1_x_cat.ai

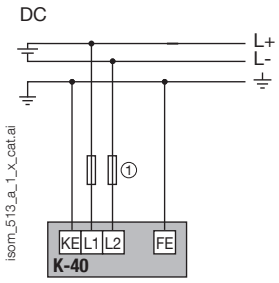

isom_513_a_1_x_cat.ai

1. 2 A gG fuses

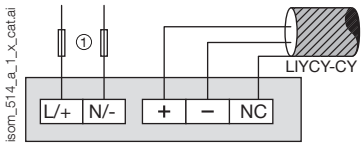

isom_514_a_1_x_cat.ai

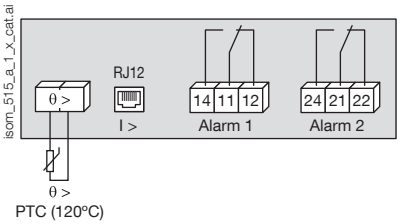

isom_515_a_1_x_cat.ai

L1 - L2: network voltage U_n
KE - FE: earthing connection
L/+ - N/-: auxiliary power supply U_s
AC power supply: 1 A gG fuses
DC power supply: T1AH300VDC fuses
+ - NC: RS485 Modbus

θ >: Connection to the temperature sensor (PTC)
I >: RJ12 connection to current sensor
12 - 11 - 14: alarm relay output 1
22 - 21 - 24: alarm relay output 2

Characteristics

Network voltage U_n	
AC range	AC 24 to 480 V
DC range	DC 24 to 240 V
Frequency	DC 50 to 460 Hz
Assigned operating voltage	480 V
Auxiliary power supply U_s	
Power supply voltage	As per reference
Max. consumption	10 VA
Fault alerts	
Number of thresholds	2
Type of threshold	Adjustable
Value of the threshold	1 kΩ to 1 MΩ
Max. leakage capacity	150 µF

Inputs/outputs	
Temperature or stop	PTC or TOR inputs - 2 wires
Current sensors	TE, TR, TF models – RJ12
Output contacts	
Number of contacts	2
Contact type	Changeover switch
AC nominal voltage	230 V
DC nominal voltage	30 V
Steady-state current	3 A
Operating mode	Standby / On
Preset operating mode	Standby
Operating conditions	
Operating temperature	-10 to +55 °C
Storage temperature	-40 to +85 °C
Relative humidity	95% at 55 °C

References

ISOM Digiware	Network voltage U_n	Auxiliary power supply U_s	Alert threshold	Reference
K-40 AC	AC 24 to 480 V / DC 24 to 240 V	AC 110-230 V 50-60 Hz / DC 120-240 V	1 to 1,000 KΩ	4725 **0120**
K-40 DC	AC 24 to 480 V / DC 24 to 240 V	24 VDC	1 to 1,000 KΩ	4725 **0121**

Accessories	Available for order in multiples of	Reference
Fuse circuit breakers to protect auxiliary and mains power supplies (type RM) 2-pole	4	5701 **0020**
gG 10x38 1 A fuses	10	6012 **0001**
gG 10x38 2 A fuses	10	6012 **0002**