E20844

Mounting set for position sensors

CLAMP OF V4A FREESTANDING

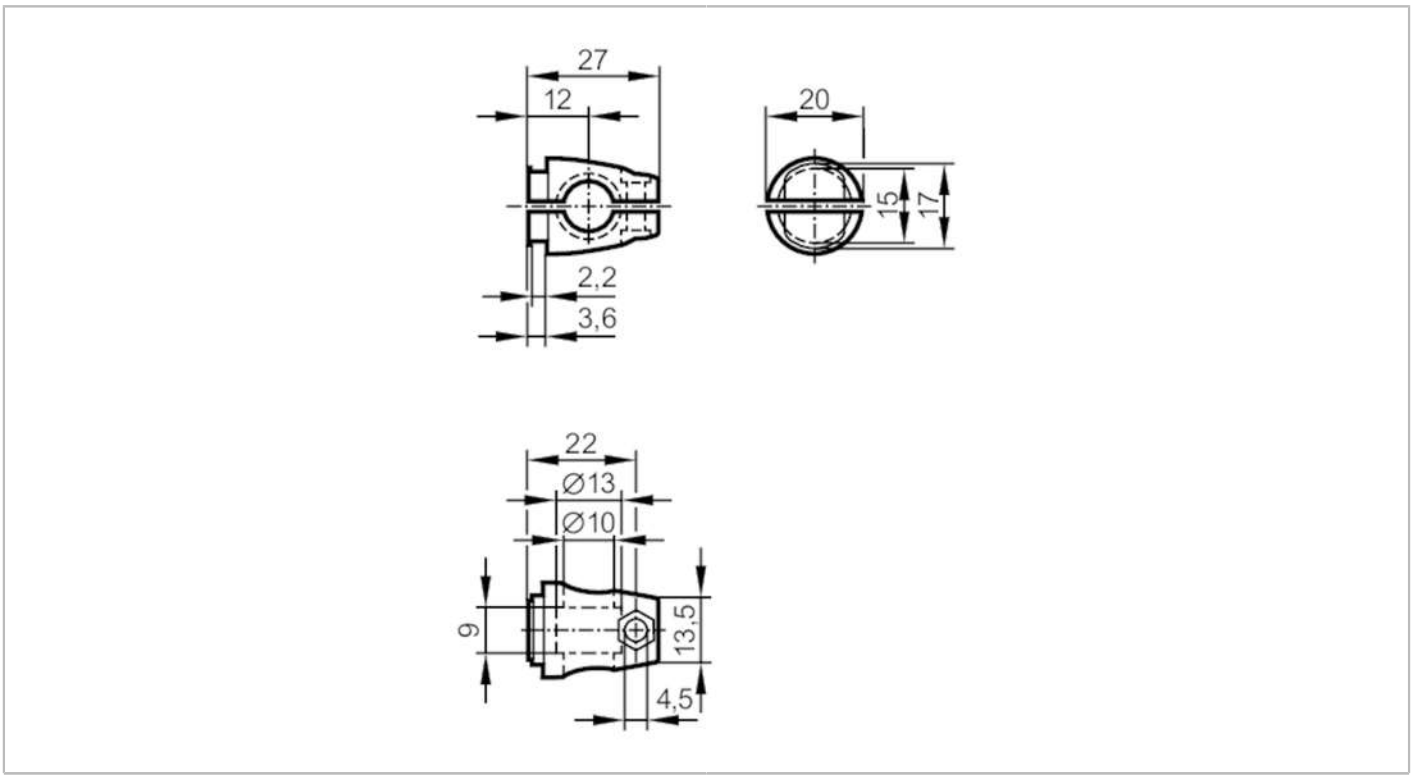

Mechanical data		
Weight	[g]	92.5
Type of mounting		free-standing; (M8)
Dimensions	[mm]	M8
Thread designation		M8
Materials		Clamp: stainless steel (1.4571/316Ti)
Accessories		
Items supplied		head cap screw: 1 x M8 x 80
		washers: 2
		hexagon nuts: 2
Remarks		
Pack quantity		1 pcs.