efector200

# O6H301

O6H-FPKG/0.30m/US

**Photoelectric sensors**

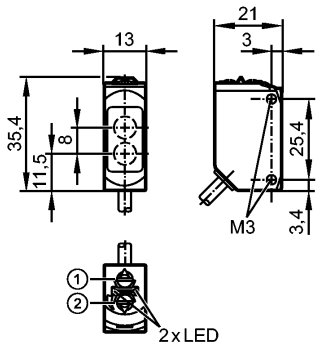


1: output function switch
2: potentiometer sensitivity

Made in Germany

## Product characteristics

Diffuse reflection sensor

Rectangular Metal

Cable with connector

adjustable

Background suppression

Range 2...200mm (referred to white paper 200 x 200 mm)

## Electrical data

| | | |
|---|---|---|
| Electrical design | | DC PNP |
| Operating voltage | [V] | 10...30 DC |
| Current consumption | [mA] | 22 (24 V) |
| Type of light | | Red light 633 nm |
| Protection class | | III |
| Reverse polarity protection | | yes |

## Outputs

| | | |
|---|---|---|
| Output function | | light-on/dark-on mode selectable |
| Voltage drop | [V] | < 2.5 |
| Current rating | [mA] | 100 |
| Short-circuit protection | | pulsed |
| Switching frequency | [Hz] | 1000 |

## Range

Range [mm]

| | | |
|---|---|---|
| Range | [mm] | 2...200 (referred to white paper 200 x 200 mm) |
| - Object white (90 % remission) | | 2...200 |
| - Object grey (18 % remission) | | 4...200 |
| - Object black (6 % remission) | | 8...200 |
| Light spot diameter | [mm] | 8 ( at maximum range ) |

**Accuracy graph**

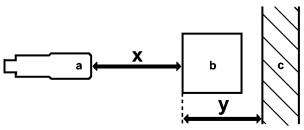


a: sensor
b: object

c: background
x: distance sensor / object
y: min. distance object / background

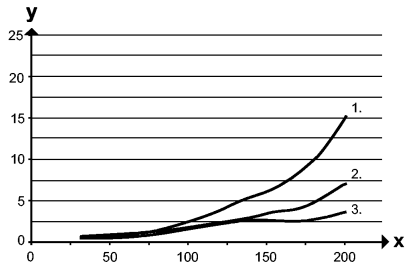


Values in [mm]
1 = object black (6 % remission), background white (90 % remission)
2 = object grey (18 % remission), background white (90 % remission)
3 = object white (90 % remission), background white (90 % remission)

| | | |
|---|---|---|
| **Environment** | | |
| Ambient temperature | [°C] | -25...80 |
| Protection | | IP 65 / IP 67 ; IP 68 / IP 69K |
| **Tests / approvals** | | |
| EMC | | EN 60947-5-2 |
| MTTF | [Years] | 708 |
| UL approval number | | E006 |
| **Mechanical data** | | |
| Housing materials | | housing: stainless steel 316L / 1.4404; plastics: PPSU |
| Lens material | | PMMA |
| Weight | [kg] | 0.053 |
| **Displays / operating elements** | | |
| Output status indication | LED | yellow |
| Operation | LED | green |
| **Electrical connection** | | |
| Connection | | PVC cable / 0.3 m; 4 x 0.25 mm²; with M12 connector |

**Wiring**




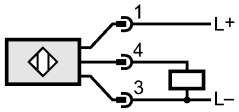


| | | |
|---|---|---|
| **Remarks** | | |
| Remarks | | UL - Class 2 source required |
| Pack quantity | [piece] | 1 |