E12500

Wirable plug

SSTGH040ZDSFKG

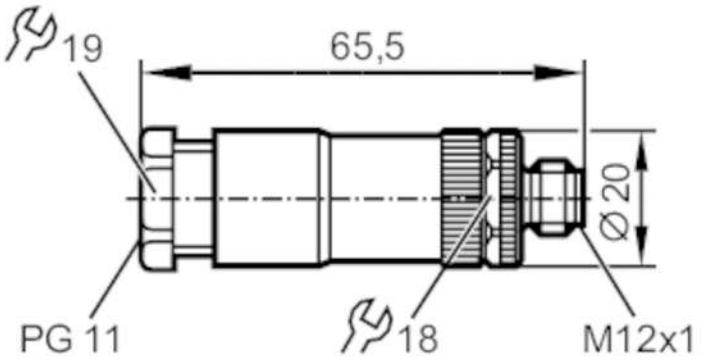

Application		
Special feature		Free from silicone; Gold-plated contacts
Design		power cable, T-coded
Free from silicone		yes
Electrical data		
Operating voltage	[V]	< 60 DC
Max. current load total	[A]	12; (when using conductors with 1.5 mm²)
Operating conditions		
Ambient temperature	[°C]	-40...85
Protection		IP 67
Mechanical data		
Weight	[g]	25.7
Dimensions	[mm]	20 x 20 x 65.5
Moulded-body material		PA
Material nut		diecast zinc
Sealing material		NBR
Remarks		
Pack quantity		1 pcs.

E12500

Wirable plug

SSTGH040ZDSFKG

Electrical connection

screw terminals: 0.75...1.5 mm²; Cable sheath: Ø 8...10 mm

Electrical connection - plug

Connector: 1 x M12, straight; coding: T; Moulded body: PA; Locking: diecast zinc; Sealing: NBR; Contacts: gold-plated; Tightening torque: 0.4 Nm

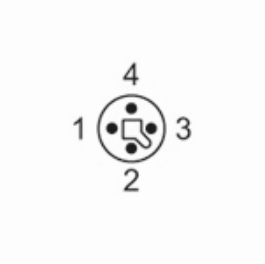

Connection

