TECHNICAL OVERVIEW

8762/3/4A, B, C Coaxial Switches

High performance switches for microwave and RF instrumentation and systems

Keysight Technologies, Inc. offers a ver-satile line of multiport coaxial switches. These 50Ω mechanical-latching switches come with the performance and reliability that you have come to expect in Keysight micro---wave accessories.

Offering excellent electrical and mechanical performance with broadband operation, high isolation, low SWR, long life, and exceptional repeatability, these switches are designed with your applications in mind. Frequency ranges are available to 4 GHz and 18 GHz for the A and B models with SMA connectors and to 26.5 GHz for the C models with APC-3.5 connectors.



KEYSIGHT TECHNOLOGIES

The 8762A, 8762B, and 8762C (Figure 1) are single-pole double-throw switches with high isolation, > 100 dB at 4 GHz for the A model, > 90 dB at 18 GHz for the B model and > 50 dB at 26.5 GHz for the C model. All models terminate the unused port with 50Ω, a key feature for your applications where low SWR is required on all ports. The 8763A, 8763B, and 8763C (Figure 2) have 4 RF ports with one internal 50Ω termination designed for applications requiring a transfer switch or a cross switching element.

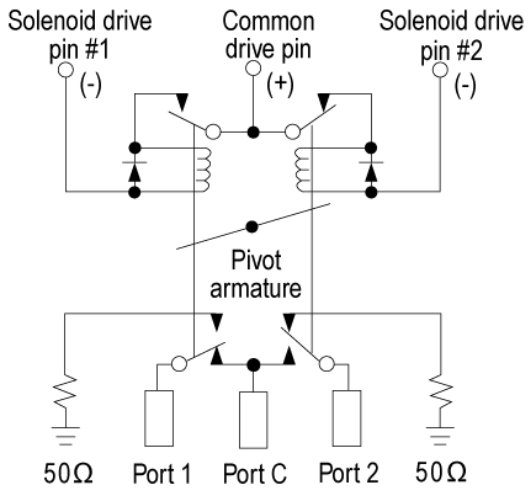

Figure 1. Keysight 8762

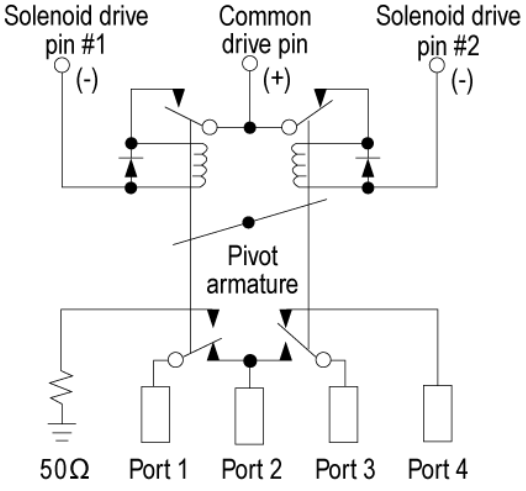

Figure 2. Keysight 8763

The 8764A, 8764B, and 8764C (Figure 3) round out the family with 5 RF ports, giving you flexibility to configure the switch for your specific needs.

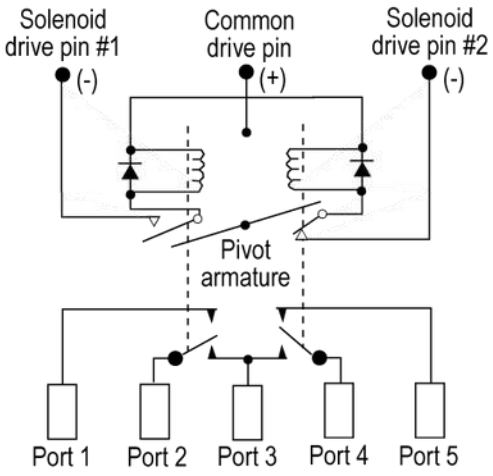

Figure 3. Keysight 8764

Applications

Multi-source switching

The 8762A, 8762B or 8762C is an excellent choice for applications where you require selection of multiple signal sources, frequency counters, or signal control devices such as modulators or filters, or routing signals from multiple sources as shown in Figure 4.

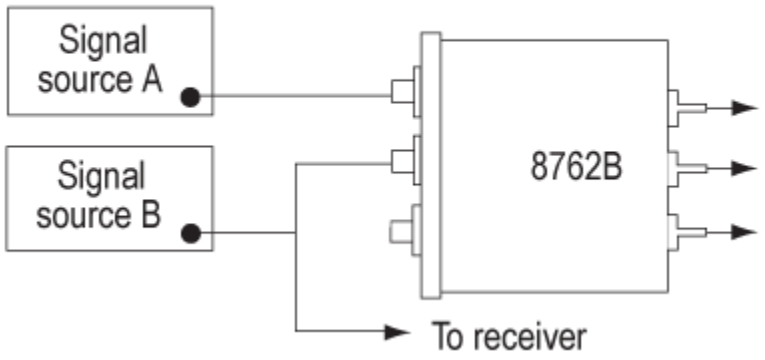

Figure 4. Multi-source switching

Transfer switching

For applications requiring a “transfer switch,” as shown in Figure 5, an 8763A, B, or C is the ideal choice to insert a component, such as a filter or mixer, into a signal path. Another popular use is to switch between a device under test and a through path for system calibration. The 8763A,B,C’s internal load can terminate the device under test when in the through mode (up to 1 watt).

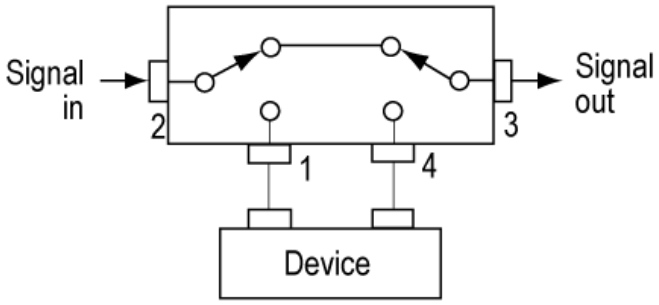

Figure 5. Keysight 8763 used as a transfer switch (equivalent circuit action)

Reverse signal path

Figure 6 shows how an 8762 and 8764 may be used to provide a “transceiver” configuration. This example illustrates how one amplifier can be used to transmit or receive. Any application where the signal path direction needs to be reversed could use this configuration.

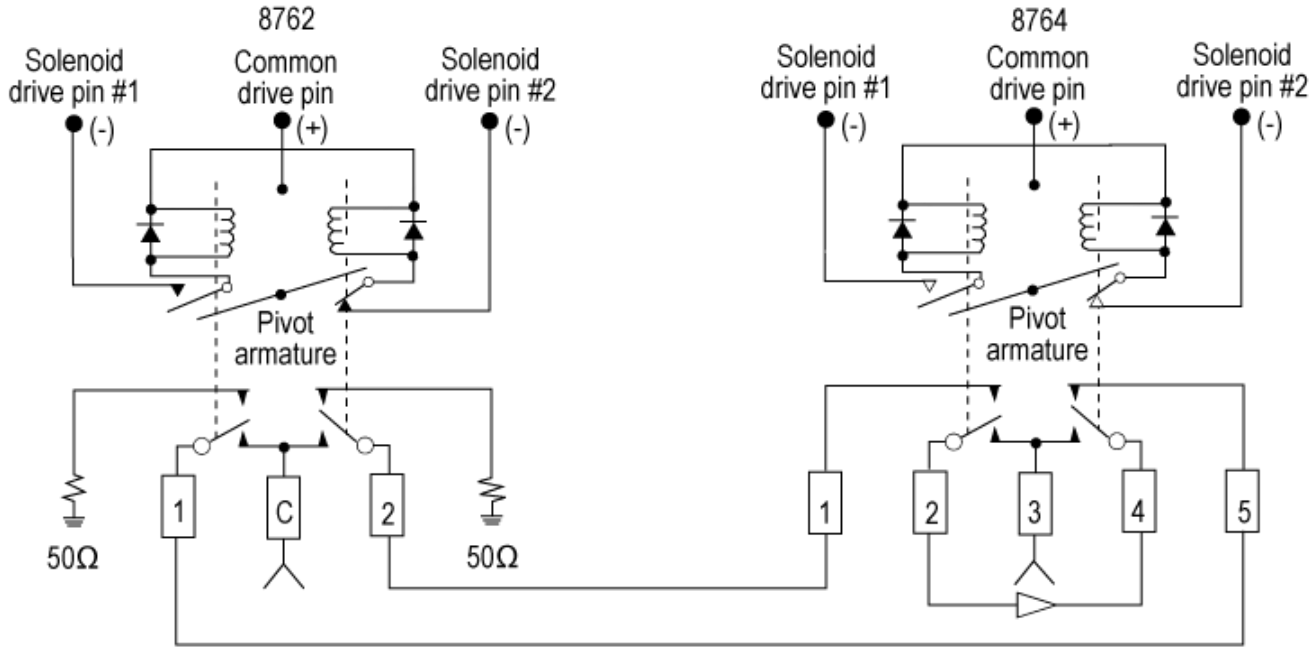

Figure 6. Signal reversal

Portable and remote applications

Due to their small package size, light weight, low power consumption, and high reliability, these switches are ideal for your portable or remote applications. The light weight and repeatability make them well suited for portable spectrum analyzers and other portable microwave test equipment. Their 1,000,000 cycle life make them the ideal candidate for system design, such as communications repeaters or remote monitoring stations that demand minimal maintenance. The switch's automatic coil disconnect feature and low current drain during switching minimize the amount of power needed for operating the switches.

Dedicated switching

For larger switching systems, where many switches will be used to provide complex signal routing, a switch driver such as the 87130A or 70611A is recom-mended. The 87130A rack-and-stack switch driver and the MMS-based 70611A are convenient, flexible interface bus (GPIB) or modular systems interface bus (MS-IB) switch controllers, providing driver circuitry, indicator readback circuitry and firmware that makes it easy to integrate switch components into a switching system. Controlling the 87130A is simple using either a PC or workstation based GPIB controller and Keysight Interactive Test Generator (Keysight-ITG) or Keysight Visual Engineering Environment (Keysight VEE). The 70611A gives manual control via the MMS user interface or can also be controlled via an GPIB equipped PC or workstation.

In addition, the built-in firmware makes it possible to define often used switch paths. With the path command, macros can be designed which open and close the right solenoids to select the desired switch port, and the path may be given a meaningful name. Remember that only one select pin should be activated at one time to prevent rapid cycling of the switch.

Both the 87130A and 70611A provide position monitoring and reporting, which make it possible for a program to determine if all the switches are in their proper state (position) before the program continues with testing. A programmable wake up condition makes it possible to ensure that the matrix or switching system starts up in a predetermined state, to prevent damage to delicate equipment from excessive power. This would also be the state that the system returns to after a power interruption.

Accessory cables and adapters make it easy to quickly get the 8762/3/4 working with the 87130A or 70611A. Reference literature number 5963-2038E, Switch Attenuator Driver Configuration Guide.

For smaller switching needs, the 11713B/C attenuator/switch controller provides simple GPIB control for up to ten 8762/3/4 switches. Connecting cables can be ordered which make it easy to connect the switches to the 11713B/C. Refer to literature number 5958-7277EN, *Keysight 11713B/C Attenuator/Switch Drivers Configuration Guide*.

Operation and use

How the switch works

All the switches are “break before make;” the switched ports are not connected to each other preventing possible damage to sensitive circuits. The standard configuration switch uses 24 Vdc for the switching voltage, Option 876xx-0111 specifies a voltage of 5 Vdc, and Option 876xx-015 specifies 15 Vdc. Options 876xx-T15 and 876xx-T24 are TTL/5V CMOS compatible with 15 Vdc and 24 Vdc drive respectively.

Driving the switch

For standard, Options 876xx-011 and 876xx-015 switches, switching is accomplished by applying the supply voltage to pin “C” and grounding the appropriate pin to actuate the switching mechanism. **Avoid grounding both RF path select pins as rapid cycling may occur**. After the switch is fully latched (30 ms), the drive current is automatically disconnected. If the drive circuit is pulsed, the pulse duration must be at least 30 ms to ensure that the switch will fully latch. For TTL/5 volt CMOS compatible drive (Options 876xx-T24 and 876xx-T15), apply the supply voltage to pin “C,” and ground to pin #1. Switch positions by applying a TTL “high” or TTL “low” to pin #2 as needed. See Table 1.

Remote indication (TTL options excluded)

The position of the switch may be determined by utilizing the open and closed states of the internal coil contacts. Figure 7 displays two indicator circuits, one to provide a TTL output and one that directly activates an LED. The circuits will output a TTL “HI” and LED “on” if the switch is in the state shown in Figure 7. When drive pin 1 contact is closed (as shown), RF port 2 is connected to common port. For the Keysight 8763/4, see Figures 2, 3, and Table 1 for corresponding RF port connections. The circuits shown are designed to operate with coil voltage of 24 V. If other voltage switches are used, the circuit components must be modified to accommodate that voltage.

Since current is drawn through the solenoid for these indicator circuits, inadvertent switching is prevented by limiting the current to 5 mA. Additional design information may be required from the component manufacturer for the circuits described in Figure 7, depending upon specific applications.

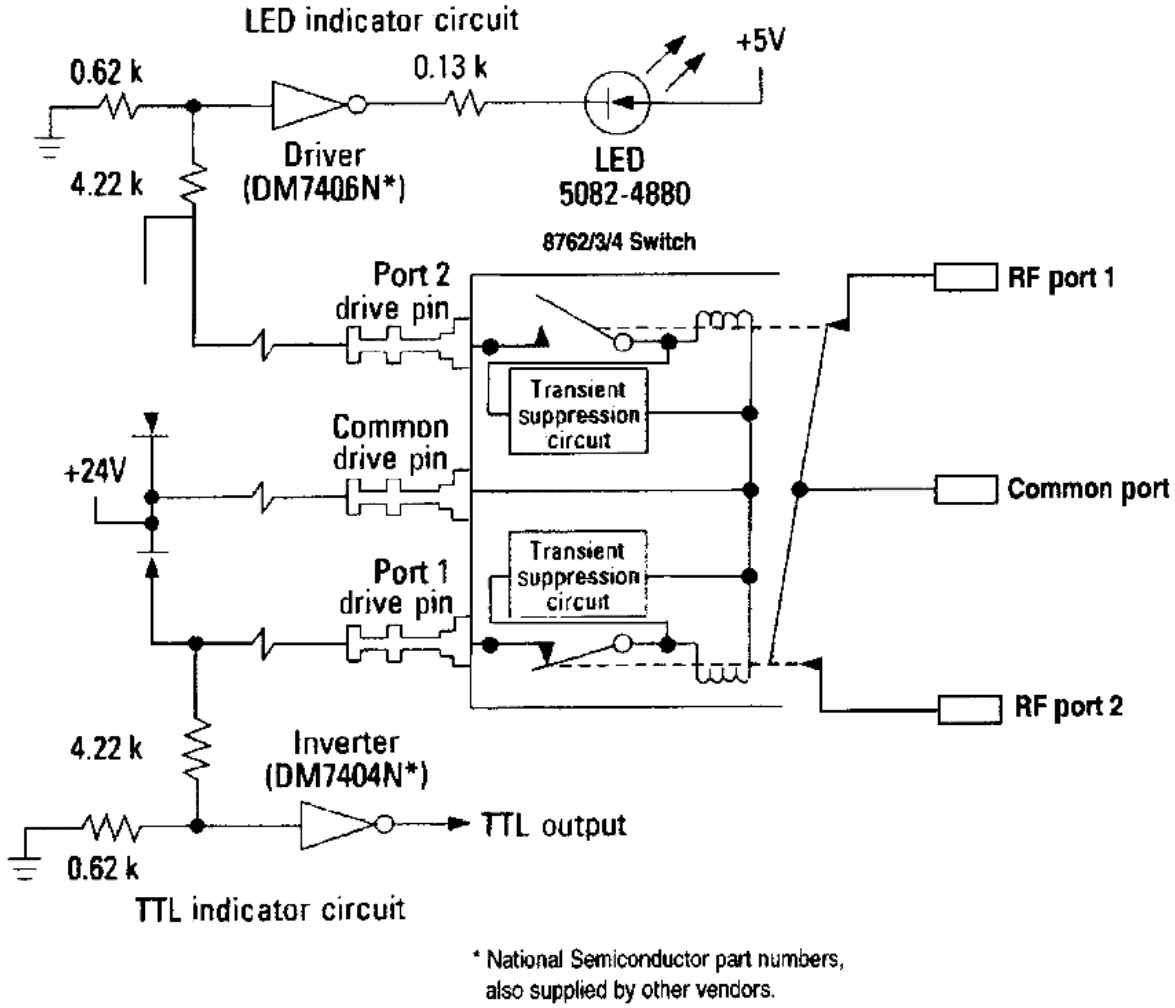

Figure 7. TTL and LED remote indicator circuits

Keysight assumes no responsibility for use of any circuits described herein, and makes no representations or warranties, expressed or implied, that such circuits are free from patent infringements.

Table 1. Switching logic table

	Standard drive		TTL drive [1]	
Model number	**Pin 1**	**Pin 2**	**Pin 2 [2]**	**RF path**
8762A/B/C	Ground	Open	TTL high	1 to C closed 2 terminated
	Open	Ground	TTL low	2 to C closed 1 terminated
8763A/B/C	Ground	Open	TTL high	1 to 2 closed 3 to 4 closed
	Open	Ground	TTL low	1 terminated 2 to 3 closed 4 Open
8764A/B/C	Ground	Open	TTL high	1 Open 2 to 3 closed 4 to 5 closed
	Open	Ground	TTL low	1 to 2 closed 3 to 4 closed 5 Open

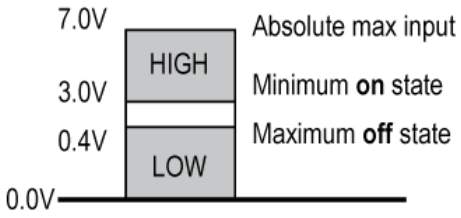

Figure 7. Control voltage states

Specifications

Keysight model numbers	8762A, 8763A, 8764A	8762B, 8763B, 8764B	8762C, 8763C, 8764C
Frequency range	dc to 4 GHz	dc to 18 GHz	dc to 26.5 GHz
Insertion loss	< 0.20 dB, dc to 2 GHz < 0.25 dB, 2 to 4 GHz	< 0.20 dB, dc to 2 GHz < 0.50 dB, 2 to 18 GHz	< 0.25 dB, dc to 2 GHz < 0.50 dB, 2 to 18 GHz < 1.25 dB, 18 to 26.5 GHz
Isolation between ports	> 100 dB, dc to 4 GHz	> 90 dB, dc to 18 GHz	> 90 dB, dc to 18 GHz > 50 dB, 18 to 26.5 GHz
SWR through line	< 1.10, dc to 2 GHz < 1.20, 2 to 4 GHz	< 1.10, dc to 2 GHz < 1.20, 2 to 12.4 GHz < 1.30, 12.4 to 18 GHz	< 1.15, dc to 2 GHz < 1.25, 2 to 12.4 GHz < 1.40, 12.4 to 18 GHz < 1.80, 18 to 26.5 GHz
Into internal 50Ω load (8762s and 8763s)	< 1.10, dc to 2 GHz < 1.20, 2 to 4 GHz	< 1.10, dc to 2 GHz < 1.20, 2 to 12.4 GHz	< 1.15, dc to 2 GHz < 1.25, 2 to 12.4 GHz < 1.30, 12.4 to 18 GHz < 1.80, 18 to 26.5 GHz
Connectors	SMA (f)	SMA (f)	3.5 mm (f)
Insertion loss repeatability dc to 18 GHz 18 to 26.5 GHz (Up to 1,000,000 cycles measured at 25 °C)	0.03 dB typical	0.03 dB typical	0.03 dB typical 0.05 dB typical

General operating data

Maximum power rating	1 watt average; 100 watts peak (not to exceed average power rating); +7 Vdc
Life	1,000,000 cycles typical
Switching solenoid	Switching speed 30 ms maximum

Switch drive data

Parameter	Test conditions	Minimum	Nominal	Maximum	Units
Supply voltage					
Option 876xx-024 or 876xx-T24					
Options 876xx-015/876xx-T15		20	24	32	V
Option 876xx-011		12	15	20	V
		4.5	5	7	v
Supply current	**Switching; pulse width ≥ 30 ms maximum**				
Option 876xx-024 or 876xx-T24	@ Vcc = 24 Vdc		120		mA
Options 876xx-015/876xx-T15	@ Vcc = 15 Vdc		182		mA
Option 876xx-011	@ Vcc = 5 Vdc		400		mA
Impedance					
Option 876xx-024 or 876xx-T24			200		Ohm
			127		mH
Option 876xx-015, Option 876xx-T15			82		Ohm
			57		mH
Option 876xx-011			13		Ohm
			8		mH
Options 876xx-T15 and 876xx-T24					
High-level input		3			V
Low-level input			0.4		V
Max high input current	Vcc = Max V_{input} = 7.0 Vdc		300		µA
Supply current (quiescent)	V_{input} = 0.0		2.0		mA
	V_{input} = 7.0		50		µA

Environmental

Operating temperature –25 to +75 °C	Humidity 99% RH, 40°C, 5 days	Vibration 0.05”, 10 to 55 Hz	Shock 50 g’s, 3 ms

Physical specifications

Dimensions	Per Figure 9
Weight	245 g (9 oz.)

Keysight 8762 Series

Keysight 8763/64 Series

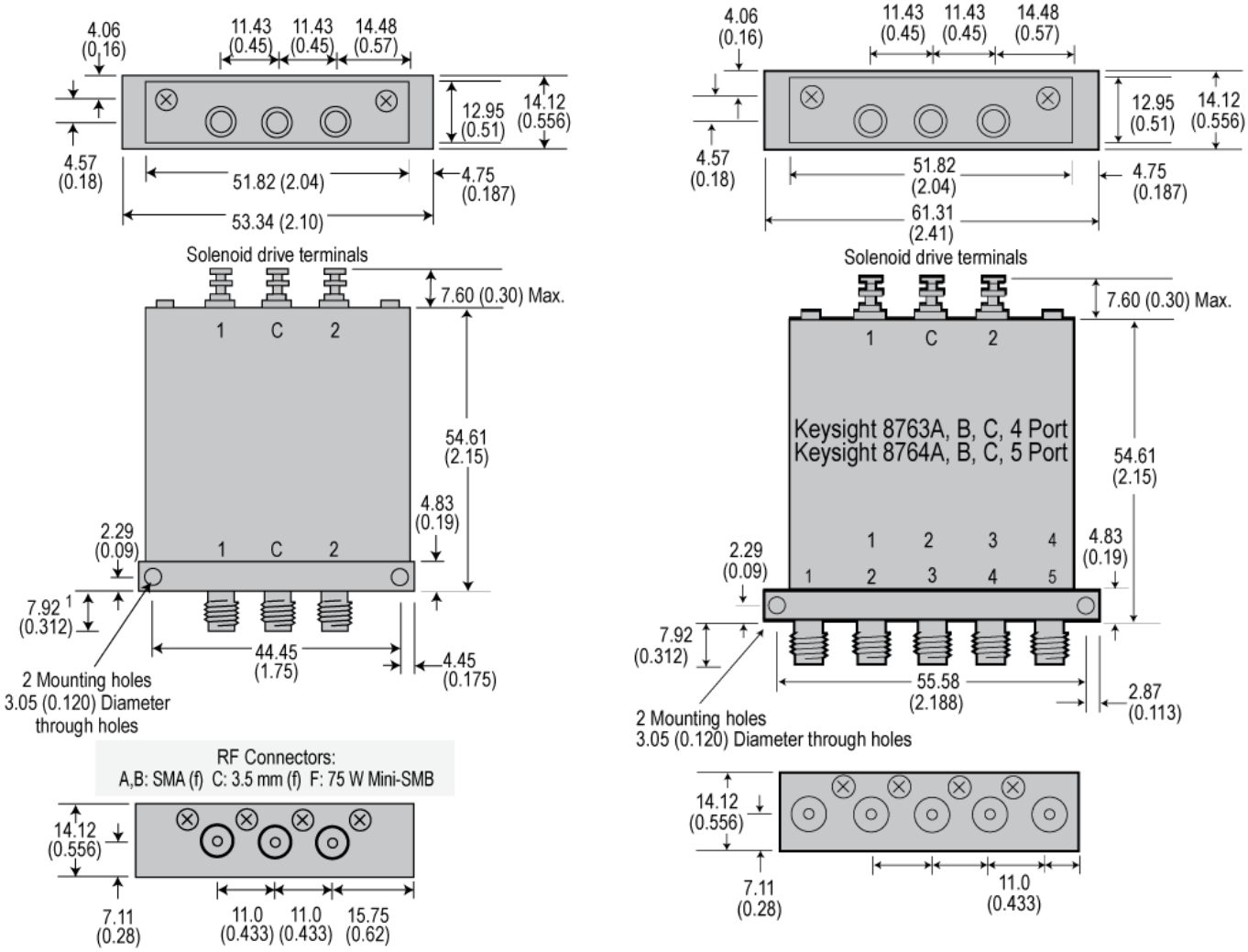

Figure 9. Product outlines

Ordering Information

Model no.	Frequency range	Option
8762A/B/C 8763A/B/C 8764A/B/C	A models: 4 GHz B models: 18 GHz C models: 26.5 GHz	Option 011: 5 Vdc Option 015: 15 Vdc Option 024: 24 Vdc Option T15: TTl/5V CMOS compatible with 15 Vdc supply Option T24: TTL/5V CMOS compatible with 24 Vdc supply Option UK6: Commercial calibration test data with certificate

Related Literature

Keysight RF and Microwave Switch Selection Guide, literature number 5989-6031EN

Learn more at: www.keysight.com

For more information on Keysight Technologies' products, applications or services, please contact your local Keysight office. The complete list is available at: www.keysight.com/find/contactus

KEYSIGHT TECHNOLOGIES

This information is subject to change without notice. © Keysight Technologies, 2017 - 2020, Published in USA, April 13, 2020, 5952-1873E