N 309 ECP

Popular item
SKF Explorer

Dimensions

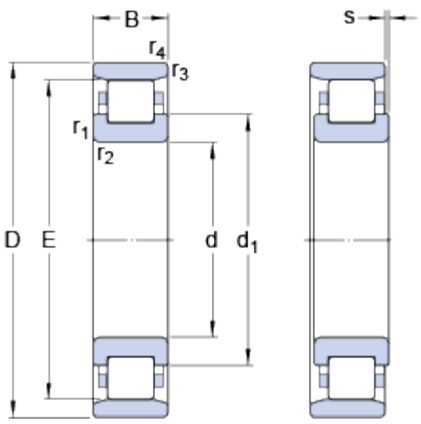

d		45	mm
D		100	mm
B		25	mm
d_1	≈	64.4	mm
E		88.5	mm
$r_{1,2}$	min.	1.5	mm
$r_{3,4}$	min.	1.5	mm
s	max.	1.7	mm

Abutment dimensions

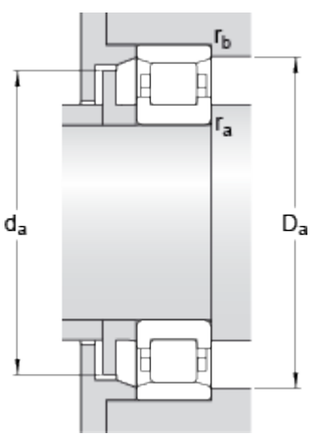

d_a	min.	54	mm
d_a	max.	86	mm
D_a	min.	91	mm
D_a	max.	92.3	mm
r_a	max.	1.5	mm
r_b	max.	1.5	mm

Calculation data

Basic dynamic load rating	C	112	kN
Basic static load rating	C_0	100	kN
Fatigue load limit	P_u	12.9	kN
Reference speed		7500	r/min
Limiting speed		8500	r/min
Calculation factor	k_r	0.12	
Limiting value	e	0.2	
Axial load factor	Y	0.6	

Mass

Mass bearing	0.88	kg