Product datasheet

Specifications



inductive sensor XS1 M18 - L48mm - brass - Sn5mm - 12..24VDC - M12

XS1N18PC410D

Main

Range of product	Telemecanique Inductive proximity sensors XS
Series name	General purpose
Sensor type	Inductive proximity sensor
Device application	Mobile equipment
Sensor name	XS1
Sensor design	Cylindrical M18
Size	51 mm
Body type	Fixed
Detector flush mounting acceptance	Flush mountable
Material	Metal
Type of output signal	Discrete
Wiring technique	4-wire
[Sn] nominal sensing distance	5 mm
Discrete output function	1 NO + 1 NC
Output circuit type	DC
Discrete output type	PNP
Electrical connection	Male connector M12, 4 pins
[Us] rated supply voltage	12...24 V DC with reverse polarity protection
Switching capacity in mA	<= 200 mA with overload and short-circuit protection
IP degree of protection	IP69K conforming to DIN 40050 IP65 conforming to IEC 60529 IP67

Complementary

Safety level	SIL 2 conforming to EN/IEC 61508 PL = d conforming to EN/ISO 13849-1 SILCL 2 conforming to IEC 62061
Safety reliability data	MTTFd = 1810 years PFHd = 62.9E-9 1/h SFF = 92 % DC = 74 % with appropriate safety controller
Service life	20 year(s)

Disclaimer: This documentation is not intended as a substitute for and is not to be used for determining suitability or reliability of these products for specific user applications

Thread type	M18 x 1
Detection face	Frontal
Front material	PPS
Enclosure material	Nickel plated brass
Operating zone	0…4 mm
Differential travel	1...15% of Sr
Status LED	Output state: 1 LED (yellow)
Supply voltage limits	9…36 V DC
Switching frequency	<= 2000 Hz
Maximum voltage drop	<2 V (closed)
Current consumption	0...10 mA no-load
Maximum delay first up	5 ms
Maximum delay response	0.15 ms
Maximum delay recovery	0.35 ms
Marking	CE
Threaded length	28 mm
Length	51 mm
Net weight	0.04 kg

Environment

Standards	IEC 62061 EN/ISO 13849-1
Product certifications	E2 CSA TÜV UL
Ambient air temperature for operation	-25…70 °C
Ambient air temperature for storage	-40…85 °C
Vibration resistance	25 gn amplitude = +/- 2 mm (f = 10…55 Hz) conforming to IEC 60068-2-6
Shock resistance	50 gn for 11 ms conforming to IEC 60068-2-27

Packing Units

Unit Type of Package 1	PCE
Number of Units in Package 1	1
Package 1 Weight	58.0 g
Package 1 Height	2.4 cm
Package 1 width	8 cm
Package 1 Length	12 cm
Unit Type of Package 2	S02
Number of Units in Package 2	44
Package 2 Weight	2.882 kg
Package 2 Height	15 cm
Package 2 width	30 cm
Package 2 Length	40 cm

Package 3 Height	4.2 cm

Offer Sustainability

Sustainable offer status	Green Premium product
REACh Regulation	REACh Declaration
EU RoHS Directive	Pro-active compliance (Product out of EU RoHS legal scope) EU RoHS Declaration
Mercury free	Yes
RoHS exemption information	Yes
Environmental Disclosure	Product Environmental Profile
Circularity Profile	End of Life Information

Contractual warranty

Warranty	18 months

Product datasheet XS1N18PC410D

Dimensions Drawings

Dimensions

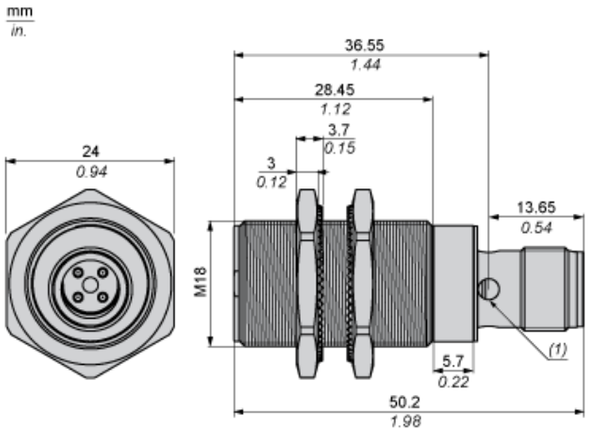

(1) LED

Minimum Mounting Distances

Side by side

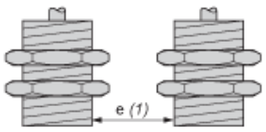

e (1) ≥ 10 mm/0.39 in.

Face to face

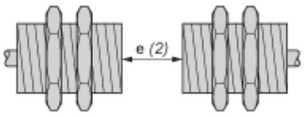

e (2) ≥ 60 mm/2.36 in.

Facing a metal object

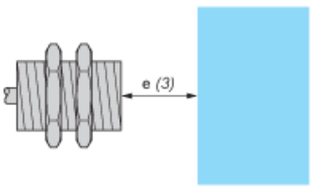

e (3) ≥ 15 mm/0.60 in

Wiring Schemes

M12 connector



PNP 4-wire

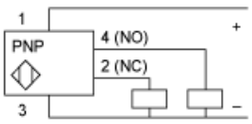

Performance Curves

Standard Steel Target : 18x18x1 mm

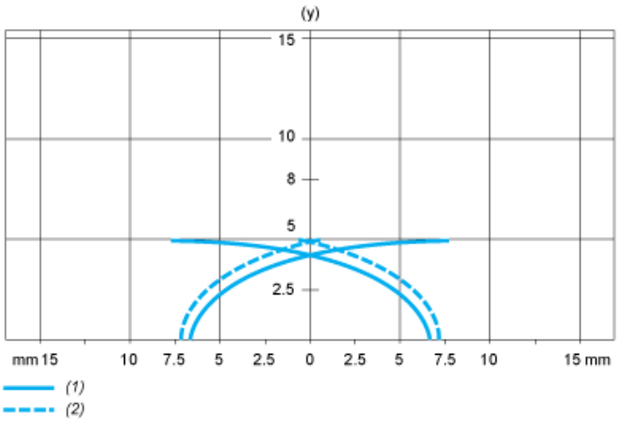

(1) Pick-up points
(2) Drop-out points (object approaching from the side)
(y) Sensing distance in mm