M12 Actuator/Sensor Distribution Boxes

ASBSV...LED



4-, 6-, and 8-Ports (LED)

Pluggable actuator/sensor distribution box with LED operation and function indicators, 4-, 6-, and 8-ports, top-entry, M12 sockets, 5-poles, 2 signals per socket, with M23 quick-disconnect for the control cable.

– control cable type: 19P: RKU 19-242/...M or RKWU 19-242/...M –

4-Ports

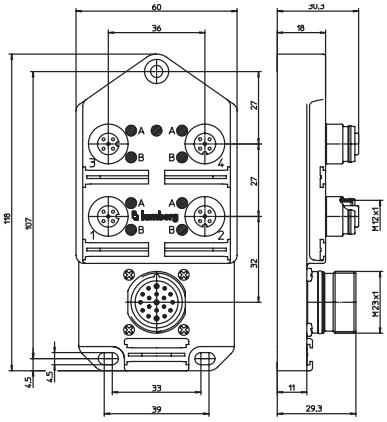

6-Ports

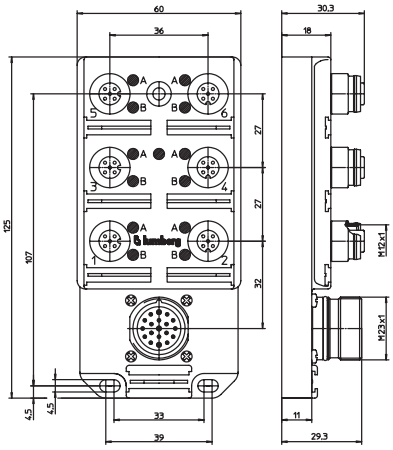

Pin Assignments

M12 / M23 Wiring Diagrams

5 P / 19 P

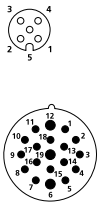

4-Ports

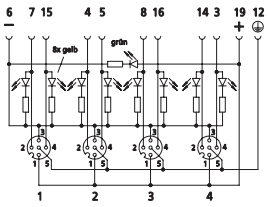

a* 8 x yellow b* green

1 =	19	(C1)
2 =	1	(7)
	2	(4)
	3	(8)
	4	(14)
3 =	6	(C3)
4 =	1	(15)
	2	(5)
	3	(16)
	4	(3)
5 =	12	(PE)

6-Ports

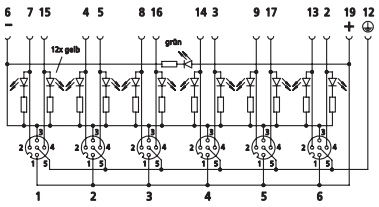

a* 12 x yellow b* green

1 =	19	(C1)
2 =	1	(7)
	2	(4)
	3	(8)
	4	(14)
	5	(9)
	6	(13)
3 =	6	(C3)
4 =	1	(15)
	2	(5)
	3	(16)
	4	(3)
	5	(17)
	6	(2)
5 =	12	(PE)

8-Ports

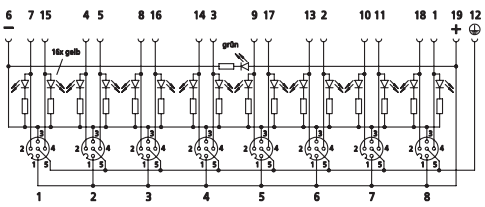

a* 16 x yellow b* green

1 =	19	(C1)
2 =	1	(7)
	2	(4)
	3	(8)
	4	(14)
	5	(9)
	6	(13)
	7	(10)
	8	(18)
3 =	6	(C3)
4 =	1	(15)
	2	(5)
	3	(16)
	4	(3)
	5	(17)
	6	(2)
	7	(11)
	8	(1)
5 =	12	(PE)



M12 Actuator/Sensor Distribution Boxes

ASBSV 4/LED 5 | ASBSV 6/LED 5 | ASBSV 8/LED 5

8-Ports

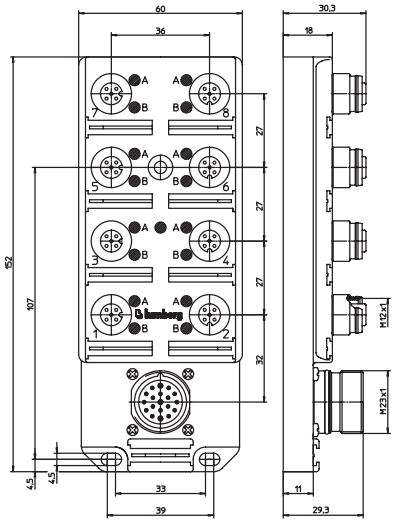

Technical Data

Environmental

Degree of protection	IP 67 / NEMA 6P
Operating temperature range	-15°C (+5°F) / +80°C (+176°F)

Mechanical

Housing	TPU, self-extinguishing
Insert	PA GF, self-extinguishing
Contact	CuZn, pre-nickeled and 0.8 microns gold-plated
Receptacle shell	CuZn, nickel-plated
O-ring	FKM

Electrical

Contact resistance	≤5mΩ
Voltage rating	10-30 V DC
Current rating	4 A per port / 10 A max. total
Insulation resistance	> 10^9 Ω

Accessories (included)

ZVK	2 dust covers for unused sockets
ZBS	10 attachable labels

Part Number	Ports	Mating Control Cables	Characteristics
ASBSV 4/LED 5	**4**	RKU 19-242/...M or RKWU 19-242/...M	
ASBSV 6/LED 5	**6**	RKU 19-242/...M or RKWU 19-242/...M	
ASBSV 8/LED 5	**8**	RKU 19-242/...M or RKWU 19-242/...M	