Brand of NTN corporation

Technical data

EXPE218

Bearing units



Grey cast housing, radial insert ball bearing with eccentric locking collar, seal with slinger

KIT CONTENT

EX218G2, PE218

VISUAL (S)

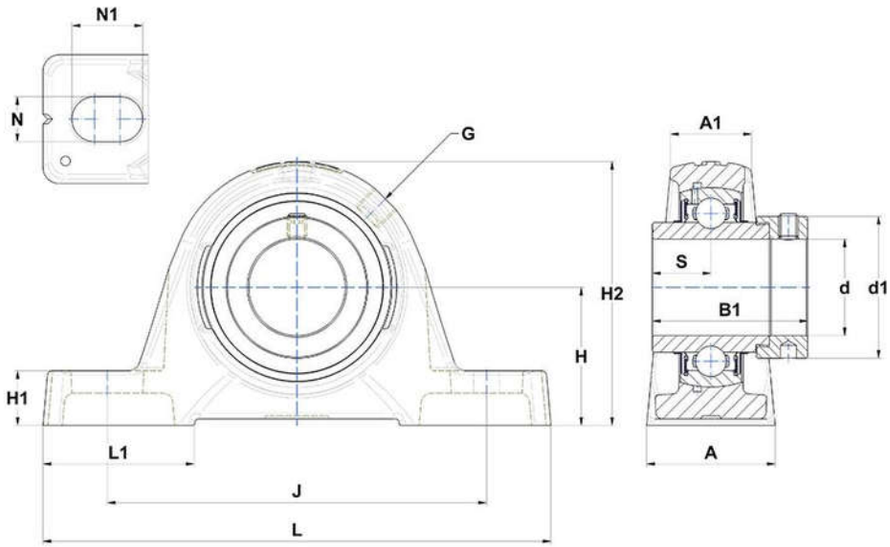

PRODUCT DEFINITION

Brand	SNR
A - Housing width	85 mm
A1 - Housing top width	55 mm
B - Width of Inner Ring	55 mm
d - Shaft diameter	90 mm
d1 - Outer dia of eccent. Lock. collar / nut of adapter sleeve	120 mm

PRODUCT DEFINITION	
G - Grease fitting	R1/8"
H - Distance mounting base to centerline spheric. seating diam.	101,6 mm
H1 - Housing foot height	35 mm
H2 - Housing height	200 mm
J - Mounting holes distance	268 mm
L - Housing length	330 mm
L1 - Housing foot length	99 mm
N - Mounting hole dimension	27 mm
N1 - Mounting hole length	35 mm
S - Distance front side/bearing centre	24,5 mm

PRODUCT PERFORMANCE	
C - Dynamic load rating	96000000 mN
C0 - Static load rating	71500000 mN
Operating temperature min.	253,15 °K
Operating temperature max.	373,15 °K

OTHER FEATURES	
Mass	14 kg
Recommended tightening torque for set screw	33 N-m