EY2005

Mounting base for safety light grids

BASE FOR FLOOR MOUNTING

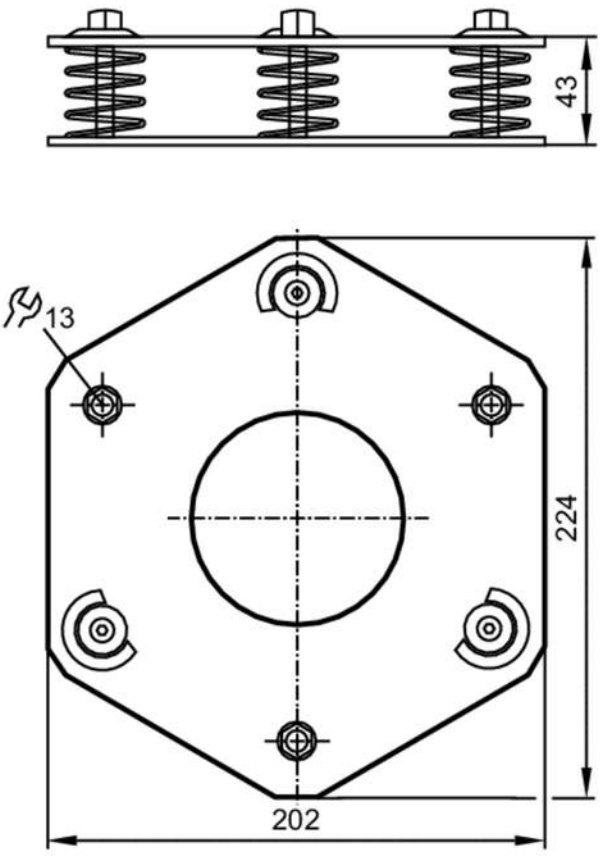

Mechanical data		
Weight	[g]	2765.5
Dimensions	[mm]	43 x 202 x 224
Accessories		
Items supplied		anchor bolts
		washers
Remarks		
Pack quantity		1 pcs.