MODEL: BU-P4160

Bulkhead Female BNC Receptacle

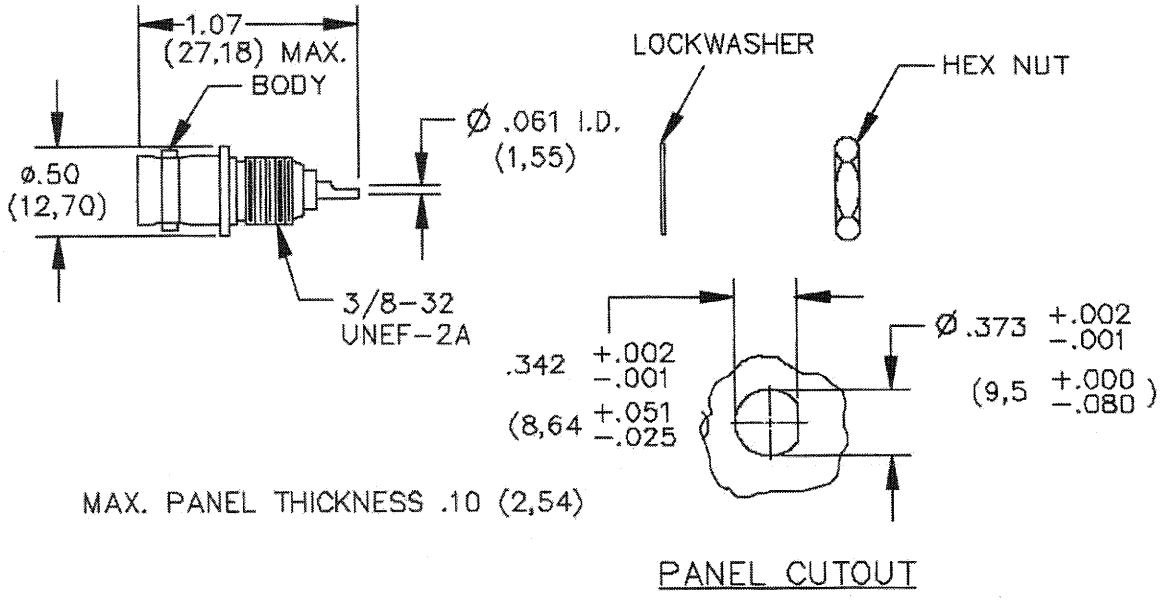

MATERIALS:
Body – Brass, Tarnish resistant plating,
Center Contact – Gold plated Beryllium copper
Dielectric – PTFE

RATING:
50 Ohms Impedance
30 VAC/60VDC Max shield/earth
500 VRMS Inner conductor/shield
Temperature: -70°C to 170°C