Datasheet

Standard Connector Compensated

SMJ IEC

Standard male connector compensated

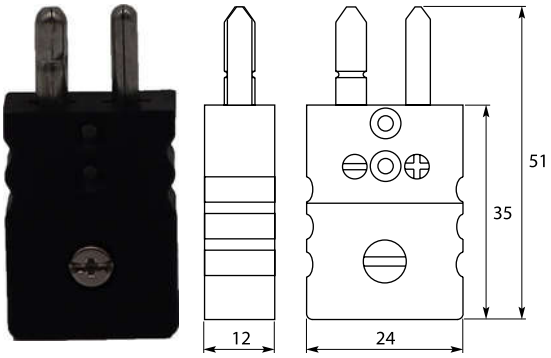

Part number : SMJ IEC

Product description : Standard male connector compensated type J

Product detail : Standard male connector compensated type J
Operating temperature -35°C to +200°C
Connecting cable on screwed terminal

SPECIFICATIONS

Attribut	Value
Accessory Type :	standard connector
Connector Type :	standard connector compensated
Version :	male
Thermocouple Type :	J
Connecteur size :	Standard
Mounting :	on cable
Minimum Temperature :	-35°C
Maximum Température :	+200°C
Shape :	rectangular

Connector

Miniature connector compensated

Male miniature connector compensated

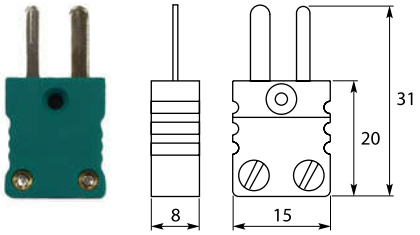

Female miniature connector compensated

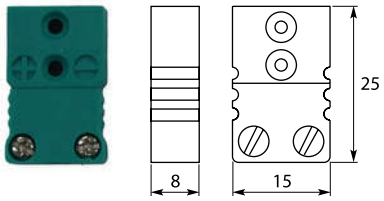

Type	Positive Contact Material	Negative Contact Material	Body Color	Male Ref	Female Ref
J *(IEC 584)*	Iron	Constantan	Black	**MMJ**	**MFJ**
K *(ANSI)*	Chromel	Alumel	Yellow	**MMK**	**MFK**
K *(IEC 584)*	Chromel	Alumel	Green	**MMK IEC**	**MFK IEC**
T *(IEC 584)*	Copper	Constantan	Brown	**MMT IEC**	**MFT IEC**
E *(IEC 584)*	Chromel	Constantan	Purple	**MME IEC**	**MFE IEC**
R/S *(IEC 584)*	Copper	Alloy	Orange	**MMS IEC**	**MFS IEC**
U *(IEC 584)*	Copper	Copper	Grey	**MMU IEC**	**MFU IEC**
N *(IEC 584)*	Nicrosil	Nisil	Pink	**MMN IEC**	**MFN IEC**

Material : fiberglass high temperature thermoplastic, 200°C
Easy wire connection
Polarized sign evoid connection mistake
Accepts wires up to 0,6 mm
Maximum cable diameter 4,5 mm
Accessory : stainless cable clamp, ref : SCM

Cable clamp for miniature connector compensated



Ref. SCM

Protective silicone rubber boot, miniature or standard version



Silicone grommet, miniature or standard version



Connector

Standard connector compensated

Male standard connector compensated

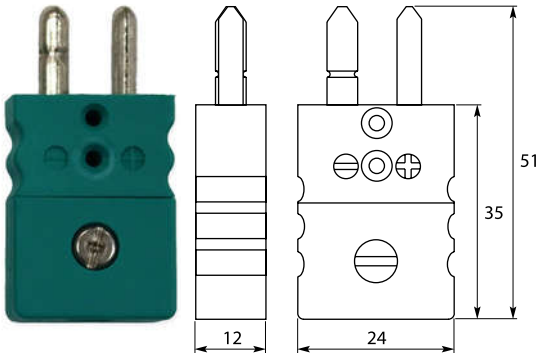

Type	Positive Contact Material	Negative Contact Material	Body Color	Male Ref	Female Ref
J *(IEC 584)*	Iron	Constantan	Black	**SMJ**	**SFJ**
K *(ANSI)*	Chromel	Alumel	Yellow	**SMK**	**SFK**
K *(IEC 584)*	Chromel	Alumel	Green	**SMKIEC**	**SFKIEC**
T	Copper	Constantan	Brown	**SMT**	**SFT**
T *(IEC 584)*	Chromel	Constantan	Purple	**SMT IEC**	**SFT IEC**
E *(IEC 584)*	Copper	Alloy	Orange	**SME IEC**	**SFE IEC**
R/S *(IEC 584)*	Copper	Copper	Grey	**SMS IEC**	**SFS IEC**
U *(IEC 584)*	Nicrosil	Nisil	Pink	**SMU IEC**	**SFU IEC**
N *(IEC 584)*	Nicrosil	Nisil	Rose	**MN IEC**	**SFN IEC**

Female standard connector compensated

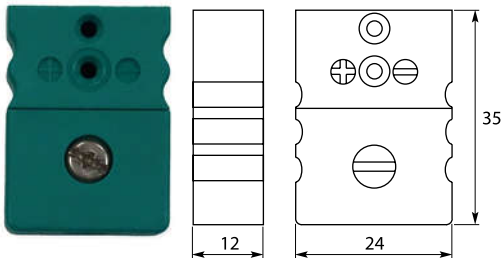

Material : fiberglass high temperature thermoplastic ,200°C
Easy wire connection
Polarized sign evoid connection mistake
Accepts wires from 0,2 to 2,0 mm
Maximum cable diameter 8 mm
Accessory : stainless steel cable clamp, ref SCS

Cable clamp for standard connector compensated



Ref. SCS

Protective silicone rubber boot, miniature or standard version



Silicone grommet, miniature or standard version

