Spherical roller bearings

22210-E1-XL (Series 222..-E1)

main dimensions to DIN 635-2

The datasheet is only an overview of dimensions and basic load ratings of the selected product. Please always observe all the guidelines in these overview pages. Further information is given on many products under the menu item "Description". You can also order comprehensive information via the Catalogue selection system (http://www.fag.de/content.fag.de/en/mediathek/library/library.jsp) or by telephone on +49 (91 32) 82 - 28 97.

d	50	mm	
D	90	mm	
B	23	mm	
D_1	80,8	mm	
d_2	59,9	mm	
$D_{a\ max}$	83	mm	
$d_{a\ min}$	57	mm	
d_s	3,2	mm	
n_s	4,8	mm	
$r_{a\ max}$	1	mm	
r_{min}	1,1	mm	
m	0,606	kg	Mass
C_r	109000	N	Basic dynamic load rating, radial
e	0,23		
Y_1	2,95		
Y_2	4,4		
C_{0r}	107000	N	Basic static load rating, radial
Y_0	2,89		
n_G	9800	1/min	Limiting speed
n_B	5100	1/min	Reference speed
C_{ur}	14300	N	Fatigue limit load, radial

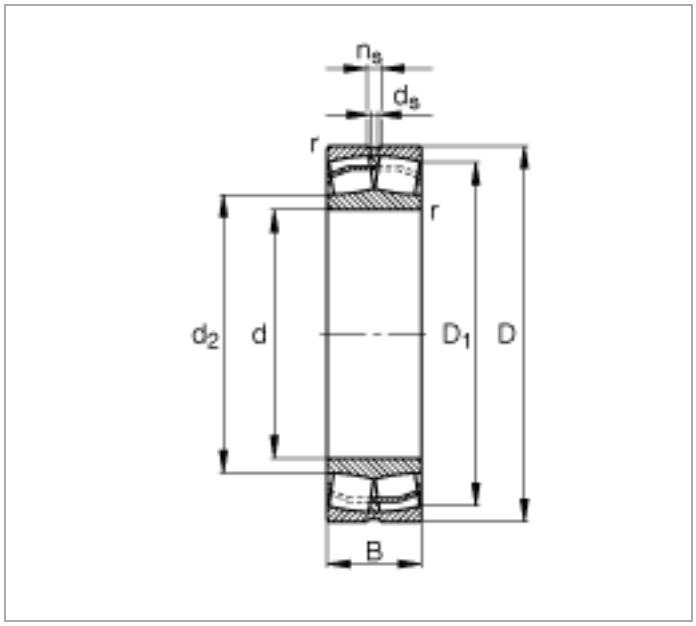
n_s
d_s
r
r
d_2
d
D_1
D
B

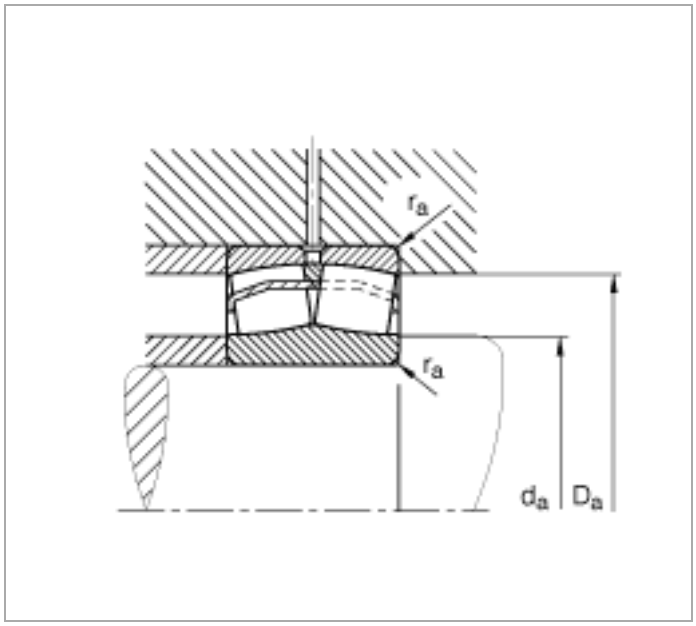
r_a
r_a
d_a
D_a