PRODUCT DETAILS

ARTICLE: 17136FR

WHEEL P 150X40/50 PLAIN BORE SWIVEL X20 + BRAKE



Wheel series P

Monolitic polyammide 6 wheels available with standard shielded or stainless steel precision ball bearings; standard or stainless steel roller bearing; plain bore.
Plain bore wheel.

Castor series INOX20

Inox20 series, polished stainless steel forks, swivels with double ball races.
Trailing foot brake - total stop.

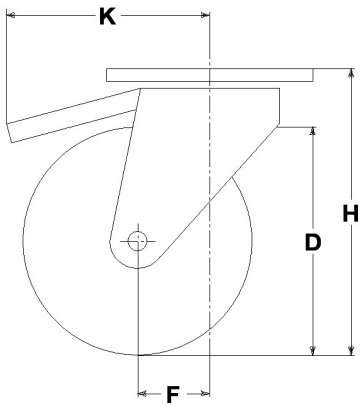

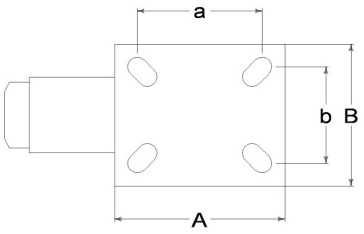

Technical data

Wheel diameter	D	150 mm
Tyre width	E	40,0 mm
Bore diameter	d	20 mm
Weight article		1,420 kg
Hub width	L	50 mm
Overall height	H	181 mm
Top plate outer dimensions	AxB	135x110 mm
Bolt hole spacing	axb	96x56 mm
Bolt hole spacing	axb	105x75 mm
Bolt hole spacing	axb	105x80 mm
Fixing bolt diameter	g	M10
Offset	F	51 mm
Fork width	U	50 mm
Load Capacity		250 kg

Related Articles

Spare part wheel: 4024
Basic version: 17136

GENERAL INFORMATION / RECOMMENDATIONS AND WARNINGS
The cited text and the complete catalogue in their most up-dated versions are available in the OEM's website page www.lagspa.it/downloads. The dimensions, descriptions, specifications and illustrations herein are indicative and subject to variations without notice. The fact that products are illustrated herein does not necessarily imply they are available from stock nor does it place us under any obligation to supply them.
Tests carried out refer to the original products with original accessories: the replacement of one of the components with others of different manufacture might prevent the same results from being achieved and will automatically invalidate any guarantee. Please contact our technical service concerning any special application.