Technical Data
Foot-switch

Series F1

Description **F1-ZSDR** Article number **6061500567**

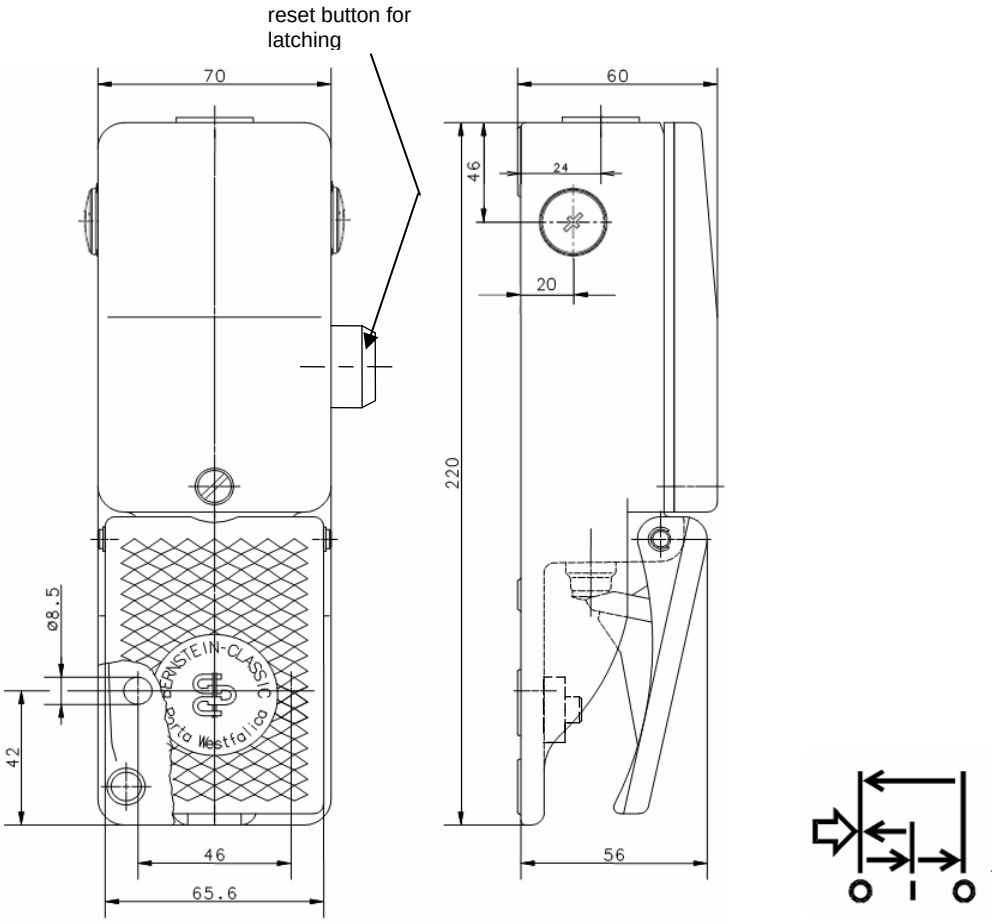

Switching symbol
(Three-Step-Safety Switch)

1. position
Off-position

2. position
On-position

3. position
Off-position
with positive opening

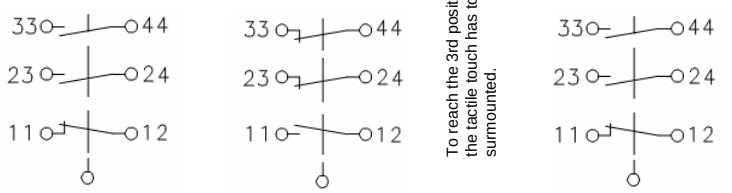

To reach the 3rd position, the tactile touch has to be surmounted.

Operating diagramme

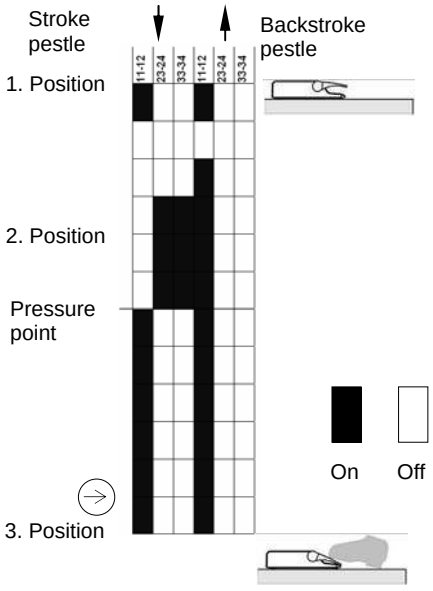

This document will not become the contractual basis; the details included herein do not constitute any descriptions of expected conditions, so that warranties/claims for defects on account of possible variations of the actual qualities from the qualities described herein are explicitly excluded. All rights reserved. Specifications subject to change without notice!

Technical Data
Foot-switch

Electrical data			
Rated insulation voltage		U_i	250 V
Conv. thermal current		I_{the}	5 A
Rated impulse withstand voltage		Uimp	2,5 KV
Rated operational voltage		U_e	240 V AC and 24 V DC
Utilization category			AC-15, U_e /I_e 240 V AC / 1,5 A 50-60 Hz DC-13, U_e /I_e 24 V DC/ 1,0 A
Direct opening action		⊖	acc. to IEC/EN 60947-5-1, Annex K
Short-circuit protective device			D-Fuse 4 A gG
Protection class			I
Mechanical data			
Enclosure			AL, die-cast
Cover			AL, die-cast
Actuator			Foot lever (PA)
Ambient air temperature			Operating temperature range: -10 °C to +50 °C Storage temperature range: -25 °C to +70 °C
Contact type			1 NC, 2 NO. (Zb)
Operating force (pedal centre)	1. position		10 N
	2. position		25 N
Pressure point			≈ 200 N
Mechanical life			
Sequence of the switching position:	1 – 2 – 1		10 x 10^6 operating cycles
or:	1 – 2 – 3 – 1		1 x 10^6 operating cycles
Switching frequency			max. 30/min
Assembly			2 x M8
Connection			6 screw connections (M3,5) with square clamps
Protection ground			2 x M4
Conductor cross-sections			Solid: 0.5 ... 1.5 mm²
			Litz wire with ferrules: 0.5 ... 1.5 mm²
Cable entrance			3 x M20 x 1,5
Weight			Approx. 1,6 kg
Protection type			IP67 in accordance with IEC/EN 60529
ID for safety engineering			
B10d - value			1 x 10^5
Regulations			
			VDE 0660 T100, DIN EN 60947-1, IEC 60947-1
			VDE 0660 T200, DIN EN 60947-5-1, IEC 60947-5-1
			DIN EN 61326-3-1
			EN 13849
			DIN EN 60947-5-8; GS-ET-22
EU Conformity			acc. to directive 2006/95/EG
Approvals			$_cUL_{us}$
			DGUV

This document will not become the contractual basis; the details included herein do not constitute any descriptions of expected conditions, so that warranties/claims for defects on account of possible variations of the actual qualities from the qualities described herein are explicitly excluded. All rights reserved. Specifications subject to change without notice!

Safety function

Normally open contacts: 23 – 24, 33 – 44; Signalling contact: 11 – 12

- Position 1: OFF position of the operating contacts (the pedal is not actuated)
- Position 2: ON position of the operating contacts (the pedal is actuated to as far as the pressure point)
- Position 3: OFF position of the operating contacts (the three-stage enable switch is locked)

If the three-stage enable switch is actuated in position 2, it returns to position 1 when it is released. The three-stage enable switch changes from position 2 to position 3, if it gets further pressed under after the resistance of the pressure point.
The switch is locked in position 3 and can only be returned in position 1 by pressing the release button.
The actuation of the operating contacts is made by a positive opening.
The operating contacts are opened in the return stroke.

Notes

The specified protection classification (IP code) applies only when the cover is closed and the appropriate cable is used, in accordance with the clamping range of the above mentioned cable gland.

This document will not become the contractual basis; the details included herein do not constitute any descriptions of expected conditions, so that warranties/claims for defects on account of possible variations of the actual qualities from the qualities described herein are explicitly excluded. All rights reserved. Specifications subject to change without notice!