Compact cylinders - Series 31

Product code: 31R2A100A200

Datasheet creation date: 19/05/2026 21:21

Check the most updated document online click here





TECHNICAL DATA

Series	31
Version	R=non-rotating with flange, only double acting
Operation	2=double-acting
Materials	A = rolled stainless steel AISI 303 rod, tube profile aluminium
Diameter (mm)	100
Construction	A = standard
Stroke (mm)	200
Seal options	= standard
Rod length (mm)	0
Rod lenght 2 (mm)	0
Certifications	= standard

Products designed for industrial applications. General terms and conditions for sale are available on www.camozzi.com.
This document contains a brief description of the products offered by Camozzi Automation at time of publication.
For more complete and up to date information about the Camozzi Automation product range, please refer to our online catalogue at https://shop.camozzi.com

Compact cylinders - Series 31

Product code: 31R2A100A200

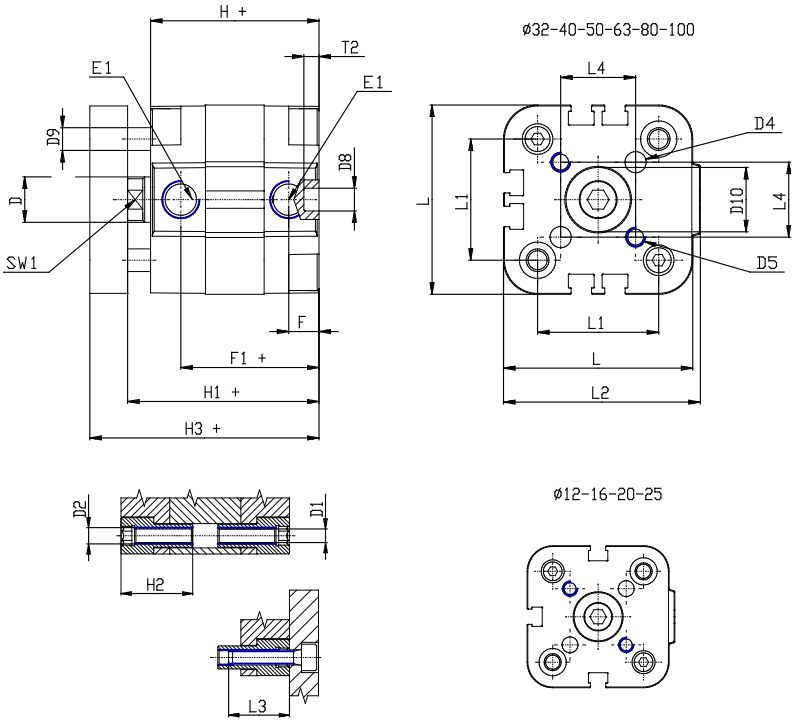

DIMENSIONS

Ø D (mm)	25
Ø D1 (mm)	8.5
D2	M10
D3	M12
Ø D4 (mm)	10
D5	M10
Ø D8 (mm)	8
D9 (mm)	12
D10 (mm)	30
E1	G1\4
F (mm)	10.0
F1 (mm)	56.0
H (mm)	66.5
H1 (mm)	76.5
H2 (mm)	31.5
K1	M20x1,5
L (mm)	128
L1 (mm)	103
L2 (mm)	133.0
L3 (mm)	25
L4 (mm)	56.6
T (mm)	20
T1 (mm)	40

T2 (mm)	4
SW1 (mm)	22

Products designed for industrial applications. General terms and conditions for sale are available on www.camozzi.com.
This document contains a brief description of the products offered by Camozzi Automation at time of publication.
For more complete and up to date information about the Camozzi Automation product range, please refer to our online catalogue at https://shop.camozzi.com