# Push-pull connectors female fixed socket CCB series

## CCB2S1/08
## 8 pole

- Premium range of circular connectors
- IP68 sealed using vacuum technology (when connected and using environmental cable clamp)
- Tough, high performance interconnection solution
- Compact panel mounting design
- Ideal for harsh and extreme environments
- Suitable for broadcasting, autosport, military, rail, marine, security, industrial and agricultural applications
- Key coded to prevent misconnection
- Will not disconnect when the cable is under load or stress
- Tested to IEC 60512-3-5a

CCB2S1/08



| PART NO. | DESCRIPTION | POLES | SERIES |
|---|---|---|---|
| CCB2S1/08 | Female fixed socket | 08 | CCB series |

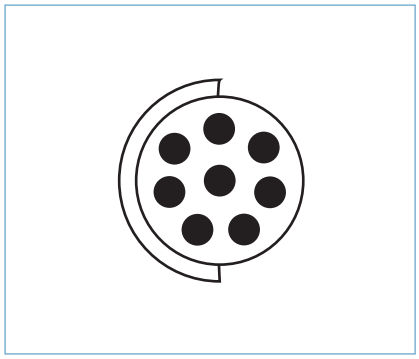

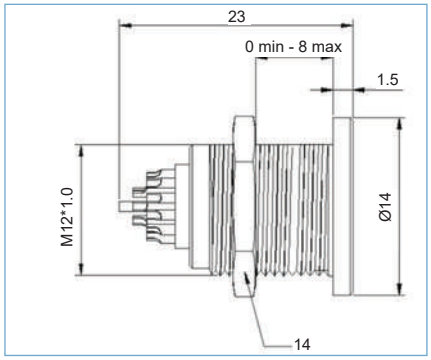


| SPECIFICATION | |
|---|---|
| Shell style/model | D type fixed socket, female contact |
| Codes | Code 1 |
| Contact type | Solder type |
| Contact diameter | 0.7mm |
| Max. stranded conductor | AWG 21-22 |
| Max diameter | 0.79mm |
| Vtest (contact-shell) | 800V(AC) 1400V(DC) |
| Vtest (contact-contact) | 1100V(AC) 1900V(DC) |
| Rated current | 3.9A |
| Rated voltage | ≤200V |
| Mechanical operation | 5000 mating cycles |
| Housing material | Brass (natural chrome plated) shell and collet nut, nickel plated brass latch sleeve and mid pieces |
| Insulator | PPS |
| Contacts | Brass (gold plated) |
| Humidity (max) | <=95% [at 60°C /140°F] |
| Vibration | 15g [10 Hz - 2000 Hz] |
| Shock resistance | 100g [6 ms] |
| Salt spray corrosion | >72 hr |
| Climatical category | 50/175/21 |
| Shielding (min) | 75 dB (10 MHz) |
| Shielding (min) | 40 dB (1 GHz) |
| IP rating | IP68 (when connected and using environmental cable clamp) |

## KEY FEATURES

Key coded | Panel mounting socket | Flat face | Low profile

## ACCESSORIES

Metal and rubber caps for sockets

| PART NO. | DESCRIPTION |
|---|---|
| CCT21 | Camcirc metal cap for sockets A2 |



| PART NO. | DESCRIPTION |
|---|---|
| CCT22 | Camcirc rubber cap for sockets A2 |



## ASSOCIATED PRODUCTS

CCA2P1/A08 - CCA Series A2 size plug page 112



bsi. ISO 9001 Quality Management FM 28614 ISO 14001 Environmental Management EMS 613558

+44 (0)1638 716101 | sales@camdenboss.com | www.camdenboss.com

We operate a constant improvement policy, our products are subject to change without notice.