TI00107R/09/EN/16.21
71514785
2021-01-22

Technical Information
iTEMP TMT142B

Temperature field transmitter with HART® protocol



Application

- Temperature transmitter with Bluetooth® capabilities and HART® communication for the conversion of various input signals into a scalable, analog 4 to 20 mA output signal
- The iTEMP TMT142B is characterized by its reliability, long-term stability, high precision and advanced diagnostic function (important in critical processes)
- Universal input for resistance thermometers (RTD), thermocouples (TC), resistance transmitters (Ω), voltage transmitters (mV)
- Stainless steel housing for demanding environmental conditions, optional

Your benefits

- Measurement with long-term stability even under harsh ambient conditions thanks to flameproof single-compartment housing and integrated overvoltage protection
- Backlit display ensures easy-to-read process information in the field
- The integrated Bluetooth® capability and optimized user interface save time and effort during commissioning, configuration and maintenance
- Predictive maintenance with advanced diagnostic functions and status messages as per NAMUR NE 107
- International approvals such as CSA (IS, NI, XP and DIP) and ATEX (Ex ia, Ex d and dust ignition-proof)

Endress+Hauser
People for Process Automation

Table of contents

Function and system design 3
Measuring principle 3
Measuring system 3

Input 4
Measured variable 4
Measuring range 4

Output 5
Output signal 5
Failure information 5
Load 6
Linearization/transmission behavior 6
Network frequency filter 6
Filter 6
Protocol-specific data 6
Write protection for device parameters 6
Switch-on delay 7

Power supply 7
Supply voltage 7
Terminal assignment 7
Current consumption 7
Terminals 7
Overvoltage protection 7

Performance characteristics 8
Response time 8
Reference operating conditions 8
Maximum measured error 8
Sensor adjustment 11
Current output adjustment 11
Operating influences 11
Influence of the reference junction 15

Installation 15
Mounting location 15
Installation instructions 15

Environment 17
Ambient temperature 17
Storage temperature 17
Humidity 17
Altitude 17
Climate class 17
Degree of protection 17
Shock and vibration resistance 17
Electromagnetic compatibility (EMC) 17
Overvoltage category 17
Degree of contamination 17

Mechanical construction 18
Design, dimensions 18
Weight 18
Materials 18
Cable entries 18

Operability 18
Operating concept 18
Local operation 19
Remote operation 20
Bluetooth® wireless technology 20

Certificates and approvals 20
CE mark 20
EAC mark 20
Ex approvals 20
CSA C/US 20
HART® certification 20
Radio approval 21
MTTF 21

Ordering information 21

Accessories 22
Device-specific accessories 22
Communication-specific accessories 22
Service-specific accessories 23
System products 24

Supplementary documentation 24

Function and system design

Measuring principle

Electronic recording, conversion and display of various input signals in industrial temperature measurement.

Measuring system

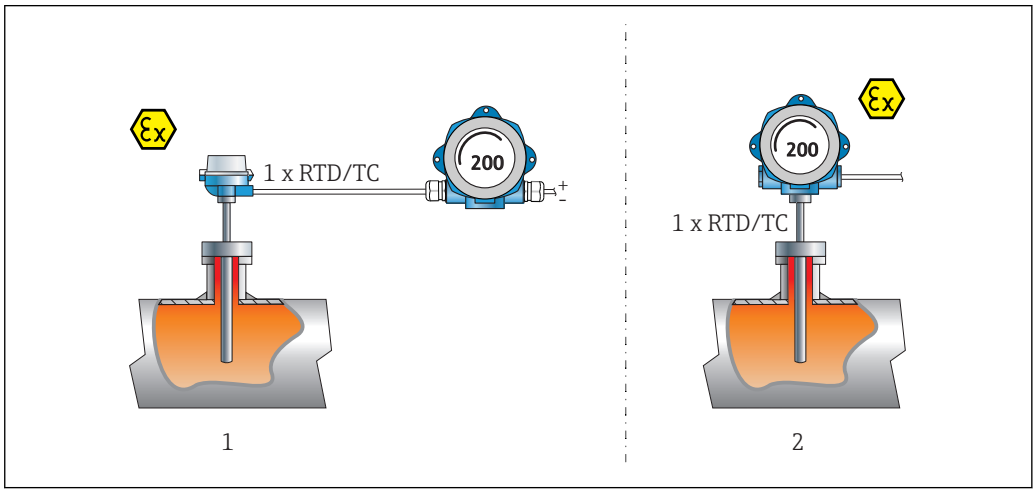

A0041387

1 *Application examples*

1 *An RTD or thermocouple sensor with field transmitter in remote installation*
2 *Field transmitter with direct sensor installation - 1 x RTD/TC wired directly*

Endress+Hauser offers a comprehensive range of industrial thermometers with resistance sensors or thermocouples.

When combined with the temperature transmitter, these components form a complete measuring point for a wide range of applications in the industrial sector.

The temperature transmitter is a 2-wire device with one measuring input and one analog output. The device not only transmits converted signals from resistance thermometers and thermocouples, it also transmits resistance and voltage signals using HART® communication and as a 4 to 20 mA current signal. It can be installed as an intrinsically safe apparatus in hazardous areas.

Intuitive commissioning and operation - wireless access to all device data via Bluetooth using the SmartBlue app.

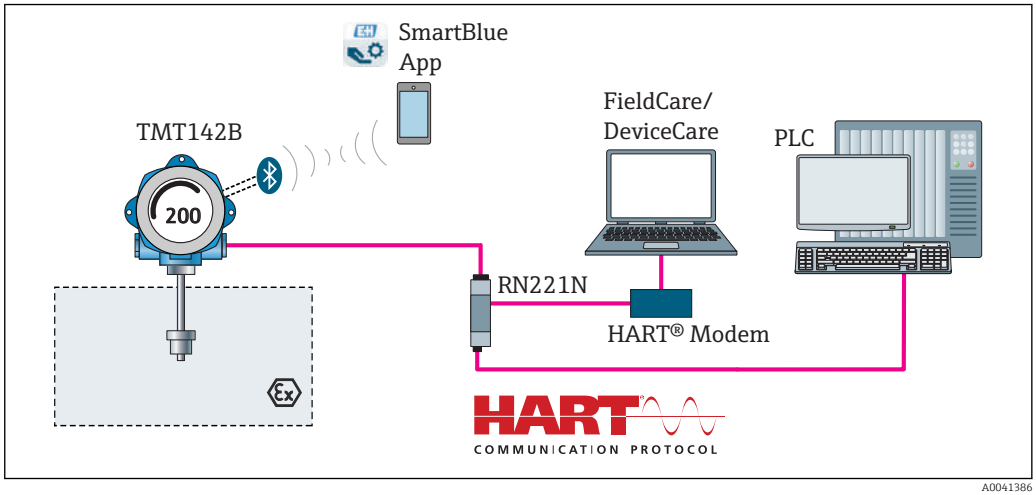

A0041386

2 *Equipment architecture*

Standard diagnostic functions

- Cable open-circuit, short-circuit of sensor wires
- Incorrect wiring
- Internal device errors
- Overrange/underrange detection
- Device temperature overrange/underrange detection

Corrosion detection as per NAMUR NE89

Corrosion of the sensor connection cables can cause incorrect measured value readings. The transmitter makes it possible to detect corrosion of the thermocouples and mV transmitters, as well as resistance thermometers and ohmmeters with 4-wire connection, before a measured value is corrupted. The transmitter prevents incorrect measured values from being exported and can issue a warning via the HART® protocol if conductor resistance values exceed plausible limits.

Low voltage detection

The low voltage detection function prevents the device from continuously transmitting an incorrect analog output value (caused by an incorrect or damaged power supply system or a damaged signal cable). If the supply voltage drops below the required value, the analog output value drops to < 3.6 mA for approx. 5 s. The device then tries to output the normal analog output value again. If the supply voltage is still too low, this process is repeated cyclically.

Diagnostics simulation

Device diagnostics can be simulated. The following items are set during such simulations:
- Measured value status
- Current diagnostics information
- Status bit of HART command 48
- Current output value as per simulated diagnostics

This simulation makes it possible to check that all higher-level systems respond as expected.

Sensor load

An overview function in the device software, which provides time data in relation to how long a connected sensor is in use in a specific temperature range, makes it possible to record and save data and values relating to the specific sensor load and to log them as a data record. This makes it possible to draw long-term conclusions regarding the aging or lifetime of the sensor.

Input

Measured variable

Temperature (temperature-linear transmission behavior), resistance and voltage.

Resistance thermometer (RTD) as per standard	Designation	α	Measuring range limits	Min. span
IEC 60751:2008	Pt100 (1) Pt200 (2) Pt500 (3) Pt1000 (4)	0.003851	−200 to +850 °C (−328 to +1 562 °F) −200 to +850 °C (−328 to +1 562 °F) −200 to +500 °C (−328 to +932 °F) −200 to +500 °C (−328 to +932 °F)	10 K (18 °F)
JIS C1604:1984	Pt100 (5)	0.003916	−200 to +510 °C (−328 to +950 °F)	10 K (18 °F)
DIN 43760 IPTS-68	Ni100 (6) Ni120 (7)	0.006180	−60 to +250 °C (−76 to +482 °F) −60 to +250 °C (−76 to +482 °F)	10 K (18 °F)
GOST 6651-94	Pt50 (8) Pt100 (9)	0.003910	−185 to +1 100 °C (−301 to +2 012 °F) −200 to +850 °C (−328 to +1 562 °F)	10 K (18 °F)
OIML R84: 2003, GOST 6651-2009	Cu50 (10) Cu100 (11)	0.004280	−180 to +200 °C (−292 to +392 °F) −180 to +200 °C (−292 to +392 °F)	10 K (18 °F)
	Ni100 (12) Ni120 (13)	0.006170	−60 to +180 °C (−76 to +356 °F) −60 to +180 °C (−76 to +356 °F)	10 K (18 °F)

Resistance thermometer (RTD) as per standard	Designation	α	Measuring range limits	Min. span
OIML R84: 2003, GOST 6651-94	Cu50 (14)	0.004260	−50 to +200 °C (−58 to +392 °F)	10 K (18 °F)
-	Pt100 (Callendar van Dusen) Nickel polynomial Copper polynomial	-	The measuring range limits are specified by entering the limit values that depend on the coefficients A to C and R0.	10 K (18 °F)
	▪ Type of connection: 2-wire, 3-wire or 4-wire connection, sensor current: ≤ 0.3 mA ▪ With 2-wire circuit, compensation of wire resistance possible (0 to 30 Ω) ▪ With 3-wire and 4-wire connection, sensor wire resistance up to max. 50 Ω per wire			
Resistance transmitter	Resistance Ω		10 to 400 Ω 10 to 2 000 Ω	10 Ω 10 Ω

Thermocouples as per standard	Designation	Measuring range limits		Min. span
IEC 60584, Part 1 ASTM E230-3	Type A (W5Re-W20Re) (30) Type B (PtRh30-PtRh6) (31) Type E (NiCr-CuNi) (34) Type J (Fe-CuNi) (35) Type K (NiCr-Ni) (36) Type N (NiCrSi-NiSi) (37) Type R (PtRh13-Pt) (38) Type S (PtRh10-Pt) (39) Type T (Cu-CuNi) (40)	0 to +2 500 °C (+32 to +4 532 °F) +40 to +1 820 °C (+104 to +3 308 °F) −250 to +1 000 °C (−482 to +1 832 °F) −210 to +1 200 °C (−346 to +2 192 °F) −270 to +1 372 °C (−454 to +2 501 °F) −270 to +1 300 °C (−454 to +2 372 °F) −50 to +1 768 °C (−58 to +3 214 °F) −50 to +1 768 °C (−58 to +3 214 °F) −200 to +400 °C (−328 to +752 °F)	Recommended temperature range: 0 to +2 500 °C (+32 to +4 532 °F) +500 to +1 820 °C (+932 to +3 308 °F) −150 to +1 000 °C (−238 to +1 832 °F) −150 to +1 200 °C (−238 to +2 192 °F) −150 to +1 200 °C (−238 to +2 192 °F) −150 to +1 300 °C (−238 to +2 372 °F) +50 to +1 768 °C (+122 to +3 214 °F) +50 to +1 768 °C (+122 to +3 214 °F) −150 to +400 °C (−238 to +752 °F)	50 K (90 °F) 50 K (90 °F) 50 K (90 °F) 50 K (90 °F) 50 K (90 °F) 50 K (90 °F) 50 K (90 °F) 50 K (90 °F) 50 K (90 °F)
IEC 60584, Part 1 ASTM E230-3 ASTM E988-96	Type C (W5Re-W26Re) (32)	0 to +2 315 °C (+32 to +4 199 °F)	0 to +2 000 °C (+32 to +3 632 °F)	50 K (90 °F)
ASTM E988-96	Type D (W3Re-W25Re) (33)	0 to +2 315 °C (+32 to +4 199 °F)	0 to +2 000 °C (+32 to +3 632 °F)	50 K (90 °F)
DIN 43710	Type L (Fe-CuNi) (41) Type U (Cu-CuNi) (42)	−200 to +900 °C (−328 to +1 652 °F) −200 to +600 °C (−328 to +1 112 °F)	−150 to +900 °C (−238 to +1 652 °F) −150 to +600 °C (−238 to +1 112 °F)	50 K (90 °F)
GOST R8.585-2001	Type L (NiCr-CuNi) (43)	−200 to +800 °C (−328 to +1 472 °F)	−200 to +800 °C (+328 to +1 472 °F)	50 K (90 °F)
	▪ Reference junction: internal, with preset value −40 to +85 °C (−40 to +185 °F) or with external sensor ▪ Maximum sensor wire resistance 10 kΩ (If the sensor wire resistance is greater than 10 kΩ, an error message is output in accordance with NAMUR NE89.)			
Voltage transmitter (mV)	Millivolt transmitter (mV)	−20 to 100 mV		5 mV

Output

Output signal

Analog output	4 to 20 mA, 20 to 4 mA (can be inverted)
Signal encoding	FSK ±0.5 mA via current signal
Data transmission rate	1200 baud
Galvanic isolation	U = 2 kV AC for 1 minute (input/output)

Failure information

Failure information as per NAMUR NE43:

Failure information is created if the measuring information is missing or not valid. A complete list of all the errors occurring in the measuring system is created.	
Underranging	Linear decrease from 4.0 to 3.8 mA

Overranging	Linear increase from 20.0 to 20.5 mA
Failure e.g. sensor failure; sensor short-circuit	≤ 3.6 mA ("low") or ≥ 21 mA ("high"), can be selected The "high" alarm setting can be set between 21.5 mA and 23 mA, thus providing the flexibility needed to meet the requirements of various control systems.

Load

Load $R_{b\ max.}$= ($U_{b\ max.}$ - 11 V) / 0.023 A (current output).

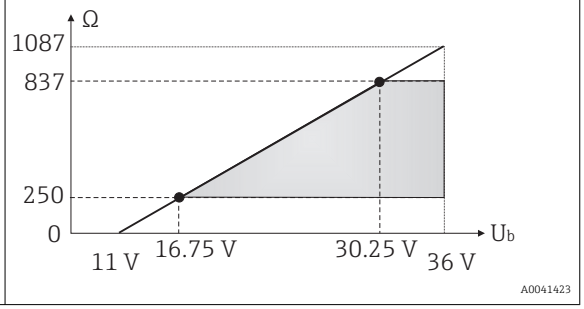

Linearization/transmission behavior

Temperature-linear, resistance-linear, voltage-linear

Network frequency filter

50/60 Hz

Filter

1st order digital filter: 0 to 120 s

Protocol-specific data

Manufacturer ID	17 (0x11)
Device type ID	0x11D1
HART® specification	7
Device address in multi-drop mode	Software setting addresses 0 to 63
Device description files (DTM, DD)	Information and files under: www.endress.com www.fieldcommgroup.org
HART load	min. 250 Ω
HART device variables	**Measured value for primary value (PV)** Sensor (measured value) **Measured values for SV, TV, QV (secondary, tertiary and quaternary variable)** ▪ SV: device temperature ▪ TV: sensor (measured value) ▪ QV: sensor (measured value)
Supported functions	▪ Squawk ▪ Condensed status

Wireless HART data

Minimum starting voltage	11 V_{DC}
Start-up current	3.58 mA
Start-up time until HART communication is possible	2 s
Start-up time until measured value is available	7 s
Minimum operating voltage	11 V_{DC}
Multidrop current	4.0 mA

Write protection for device parameters

- Hardware: write protection via DIP switch
- Software: user role-based concept (password assignment)

Switch-on delay

- ≤ 2 s until the start of HART® communication.
- ≤ 7 s until the first valid measured value signal is present at the current output.

While switch-on delay: I_a ≤ 3.8 mA.

Power supply

Supply voltage

Values for non-hazardous areas, protected against polarity reversal:
U = 11 to 36 V_{DC} (standard)

Values for hazardous areas, see Ex documentation → 📄 24

The device must be powered only by a power unit that operates using a limited energy circuit in accordance with UL/EN/IEC 61010-1, Section 9.4 and the requirements in Table 18.

Terminal assignment

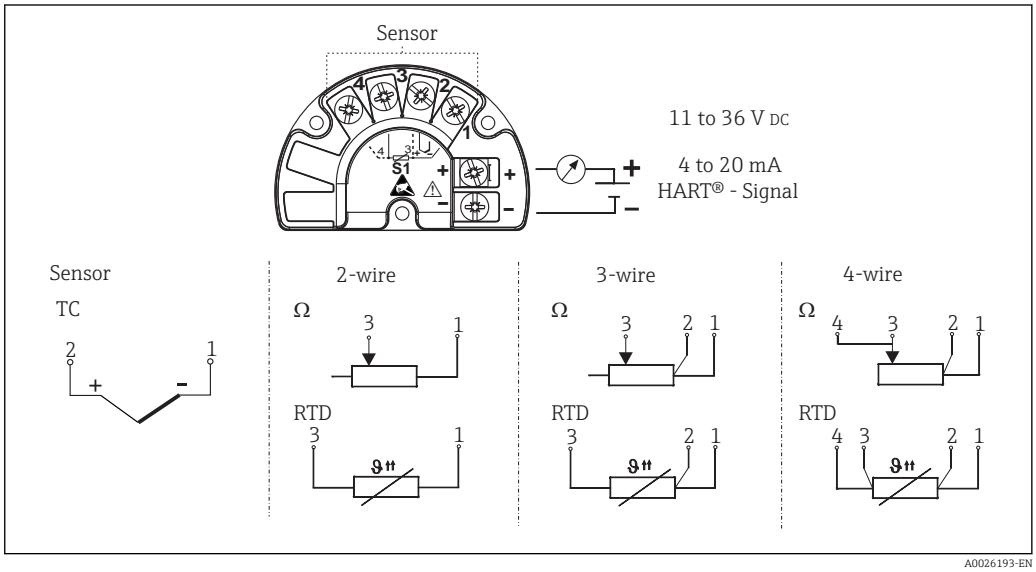

3 Wiring the transmitter

A shielded cable that is grounded on both sides must be used for sensor cable lengths of 30 m (98.4 ft) and more. The use of shielded sensor cables is generally recommended.

Connection of the functional grounding may be needed for functional purposes. Compliance with the electrical codes of individual countries is mandatory.

Current consumption

Current consumption	3.6 to 23 mA
Minimum current consumption	≤ 3.5 mA, Multidrop mode 4 mA
Current limit	≤ 23 mA

Terminals

2.5 mm^2 (12 AWG) plus ferrule

Overvoltage protection

The surge arrester can be ordered as an optional extra. The module protects the electronics from damage from overvoltage. Overvoltage occurring in signal cables (e.g. 4 to 20 mA, communication lines (fieldbus systems) and power supply is diverted to ground. The functionality of the transmitter is not affected as no problematic voltage drop occurs.

Connection data:

Maximum continuous voltage (rated voltage)	U_C = 36 V_{DC}
Nominal current	I = 0.5 A at $T_{amb.}$ = 80 °C (176 °F)

Surge current resistance ▪ Lightning surge current D1 (10/350 µs) ▪ Nominal discharge current C1/C2 (8/20 µs)	 ▪ I_{imp} = 1 kA (per wire) ▪ I_n = 5 kA (per wire) I_n = 10 kA (total)
Series resistance per wire	1.8 Ω, tolerance ±5 %

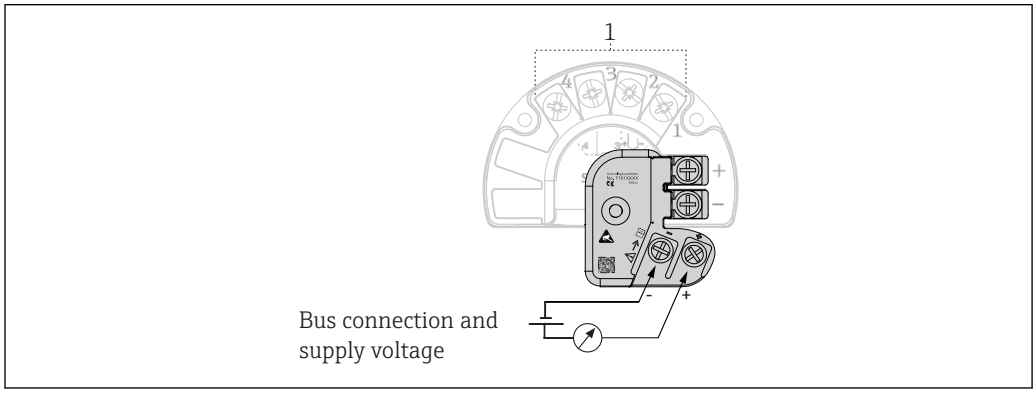

4 Electrical connection of surge arrester

1 Sensor connection

The device must be connected to the potential equalization via the external ground clamp. The connection between the housing and the local ground must have a minimum cross-section of 4 mm^2 (13 AWG) . All ground connections must be secured tightly.

Performance characteristics

Response time

Resistance thermometer (RTD) and resistance transmitter (Ω measurement)	≤ 1 s
Thermocouples (TC) and voltage transmitters (mV)	≤ 1 s
Reference temperature	≤ 1 s

When recording step responses, it must be taken into account that the times of the internal reference measuring point are added to the specified times where applicable.

Reference operating conditions

- Calibration temperature: +25 °C ±3 K (77 °F ±5.4 °F)
- Supply voltage: 24 V DC
- 4-wire circuit for resistance adjustment

Maximum measured error

In accordance with DIN EN 60770 and the reference conditions specified above. The measured error data correspond to ±2 σ (Gaussian distribution). The data include non-linearities and repeatability.

ME = Measured error

MV = Measured value

LRV = Lower range value of relevant sensor

Typical

Standard	Designation	Measuring range	Typical measured error (±)	
Resistance thermometer (RTD) as per standard			Digital value [1]	Value at current output
IEC 60751:2008	Pt100 (1)	0 to +200 °C (32 to +392 °F)	0.08 °C (0.14 °F)	0.1 °C (0.18 °F)
IEC 60751:2008	Pt1000 (4)		0.14 °C (0.25 °F)	0.15 °C (0.27 °F)

Standard	Designation	Measuring range	Typical measured error (±)	
GOST 6651-94	Pt100 (9)		0.08 °C (0.14 °F)	0.1 °C (0.18 °F)
Thermocouples (TC) as per standard			Digital value [1]	Value at current output
IEC 60584, Part 1	Type K (NiCr-Ni) (36)	0 to +800 °C (32 to +1 472 °F)	0.41 °C (0.74 °F)	0.47 °C (0.85 °F)
IEC 60584, Part 1	Type S (PtRh10-Pt) (39)		1.83 °C (3.29 °F)	1.84 °C (3.31 °F)
GOST R8.585-2001	Type L (NiCr-CuNi) (43)		2.45 °C (4.41 °F)	2.46 °C (4.43 °F)

1) Measured value transmitted via HART®.

Measured error for resistance thermometers (RTD) and resistance transmitters

Standard	Designation	Measuring range	Measured error (±)	
			Digital [1]	**D/A [2]**
			Based on measured value [3]	
IEC 60751:2008	Pt100 (1)	−200 to +850 °C (−328 to +1 562 °F)	ME = ± (0.06 °C (0.11 °F) + 0.006% * (MV - LRV))	0.03 % (≙ 4.8 µA)
	Pt200 (2)		ME = ± (0.13 °C (0.234 °F) + 0.011% * (MV - LRV))	
	Pt500 (3)	−200 to +510 °C (−328 to +950 °F)	ME = ± (0.19 °C (0.342 °F) + 0.008% * (MV - LRV))	
	Pt1000 (4)	−200 to +500 °C (−328 to +932 °F)	ME = ± (0.11 °C (0.198 °F) + 0.007% * (MV - LRV))	
JIS C1604:1984	Pt100 (5)	−200 to +510 °C (−328 to +950 °F)	ME = ± (0.11 °C (0.198 °F) + 0.006% * (MV - LRV))	
GOST 6651-94	Pt50 (8)	−185 to +1 100 °C (−301 to +2 012 °F)	ME = ± (0.15 °C (0.27 °F) + 0.008% * (MV - LRV))	
	Pt100 (9)	−200 to +850 °C (−328 to +1 562 °F)	ME = ± (0.06 °C (0.11 °F) + 0.006% * (MV - LRV))	0.03 % (≙ 4.8 µA)
DIN 43760 IPTS-68	Ni100 (6)	−60 to +250 °C (−76 to +482 °F)	ME = ± (0.11 °C (0.198 °F) - 0.004% * (MV- LRV))	
	Ni120 (7)			
OIML R84: 2003 / GOST 6651-2009	Cu50 (10)	−180 to +200 °C (−292 to +392 °F)	ME = ± (0.13 °C (0.234 °F) + 0.006% * (MV - LRV))	
	Cu100 (11)	−180 to +200 °C (−292 to +392 °F)	ME = ± (0.14 °C (0.252 °F) + 0.003% * (MV - LRV))	
	Ni100 (12)	−60 to +180 °C (−76 to +356 °F)	ME = ± (0.16 °C (0.288 °F) - 0.004% * (MV- LRV))	
	Ni120 (13)		ME = ± (0.11 °C (0.198 °F) - 0.004% * (MV- LRV))	
OIML R84: 2003, GOST 6651-94	Cu50 (14)	−50 to +200 °C (−58 to +392 °F)	ME = ± (0.14 °C (0.252 °F) + 0.004% * (MV - LRV))	
Resistance transmitter	Resistance Ω	10 to 400 Ω	ME = ± 37 mΩ + 0.0032 % * MV	0.03 % (≙ 4.8 µA)
		10 to 2 000 Ω	ME = ± 180 mΩ + 0.006 % * MV	

1) Measured value transmitted via HART®.
2) Percentages based on the configured span of the analog output signal.
3) Deviations from maximum measured error possible due to rounding.

Measured error for thermocouples (TC) and voltage transmitters

Standard	Designation	Measuring range	Measured error (±)	
			Digital [1]	**D/A [2]**
			Based on measured value [3]	
IEC 60584-1 / ASTM E230-3	Type A (30)	0 to +2 500 °C (+32 to +4 532 °F)	ME = ± (1.0 °C (1.8 °F) + 0.026% * (MV - LRV))	0.03 % (≙ 4.8 µA)
	Type B (31)	+500 to +1 820 °C (+932 to +3 308 °F)	ME = ± (3.0 °C (5.4 °F) - 0.09% * (MV - LRV))	

Standard	Designation	Measuring range	Measured error (±)	
			Digital [1]	D/A [2]
IEC 60584-1 / ASTM E230-3 ASTM E988-96	Type C (32)	0 to +2 000 °C (+32 to +3 632 °F)	ME = ± (0.9 °C (1.62 °F) + 0.0055% * (MV - LRV))	
ASTM E988-96	Type D (33)		ME = ± (1.1 °C (1.98 °F) - 0.016% * (MV - LRV))	
IEC 60584-1 / ASTM E230-3	Type E (34)	−150 to +1 000 °C (−238 to +1 832 °F)	ME = ± (0.4 °C (0.72 °F) - 0.012% * (MV - LRV))	
	Type J (35)	−150 to +1 200 °C (−238 to +2 192 °F)	ME = ± (0.5 °C (0.9 °F) - 0.01% * (MV - LRV))	
	Type K (36)			
	Type N (37)	−150 to +1 300 °C (−238 to +2 372 °F)	ME = ± (0.7 °C (1.26 °F) - 0.025% * (MV - LRV))	0.03 % (≙ 4.8 µA)
	Type R (38)	+50 to +1 768 °C (+122 to +3 214 °F)	ME = ± (1.6 °C (2.88 °F) - 0.04% * (MV - LRV))	
	Type S (39)		ME = ± (1.6 °C (2.88 °F) - 0.03% * (MV - LRV))	
	Type T (40)	−150 to +400 °C (−238 to +752 °F)	ME = ± (0.5 °C (0.9 °F) - 0.05% * (MV - LRV))	
DIN 43710	Type L (41)	−150 to +900 °C (−238 to +1 652 °F)	ME = ± (0.5 °C (0.9 °F) - 0.016% * (MV - LRV))	
	Type U (42)	−150 to +600 °C (−238 to +1 112 °F)	ME = ± (0.5 °C (0.9 °F) - 0.025% * (MV - LRV))	
GOST R8.585-2001	Type L (43)	−200 to +800 °C (−328 to +1 472 °F)	ME = ± (2.3 °C (4.14 °F) - 0.015% * (MV - LRV))	
Voltage transmitter (mV)		−20 to +100 mV	ME = ± 10.0 µV	4.8 µA

1) Measured value transmitted via HART®.
2) Percentages based on the configured span of the analog output signal.
3) Deviations from maximum measured error possible due to rounding.

Total measured error of transmitter at current output = √(Measured error digital² + Measured error D/A²)

Sample calculation with Pt100, measuring range 0 to +200 °C (+32 to +392 °F), ambient temperature +25 °C (+77 °F), supply voltage 24 V:

Measured error digital = 0.09 °C + 0.006% x (200 °C - (-200 °C)):	0.08 °C (0.14 °F)
Measured error D/A = 0.03 % x 200 °C (360 °F)	0.06 °C (0.11 °F)
Measured error digital value (HART):	0.08 °C (0.14 °F)
Measured error analog value (current output): √(Measured error digital² + Measured error D/A²)	0.1 °C (0.18 °F)

Sample calculation with Pt100, measuring range 0 to +200 °C (+32 to +392 °F), ambient temperature +35 °C (+95 °F), supply voltage 30 V:

Measured error digital = 0.04 °C + 0.006% x (200 °C - (-200 °C)):	0.08 °C (0.14 °F)
Measured error D/A = 0.03 % x 200 °C (360 °F)	0.06 °C (0.11 °F)
Influence of ambient temperature (digital) = (35 - 25) x (0.0013 % x 200 °C - (-200 °C)), min. 0.003 °C	0.05 °C (0.09 °F)
Influence of ambient temperature (D/A) = (35 - 25) x (0.03% x 200 °C)	0.06 °C (0.11 °F)
Influence of supply voltage (digital) = (30 - 24) x (0.0007% x 200 °C - (-200 °C)), min. 0.005 °C	0.02 °C (0.04 °F)
Influence of supply voltage (D/A) = (30 - 24) x (0.03% x 200 °C)	0.04 °C (0.72 °F)

Measured error digital value (HART): √[(Measured error digital² + Influence of ambient temperature (digital)² + Influence of supply voltage (digital)²]	**0.10 °C (0.14 °F)**
Measured error analog value (current output): √[(Measured error digital² + Measured error D/A² + Influence of ambient temperature (digital)² + Influence of ambient temperature (D/A)² + Influence of supply voltage (digital)² + Influence of supply voltage (D/A)²]	**0.13 °C (0.23 °F)**

The measured error data correspond to 2 σ (Gaussian distribution)

Physical input measuring range of sensors	
10 to 400 Ω	Cu50, Cu100, polynomial RTD, Pt50, Pt100, Ni100, Ni120
10 to 2 000 Ω	Pt200, Pt500
–20 to 100 mV	Thermocouples type: A, B, C, D, E, J, K, L, N, R, S, T, U

Sensor adjustment

Sensor-transmitter-matching

RTD sensors are one of the most linear temperature measuring elements. Nevertheless, the output must be linearized. To significantly improve temperature measurement accuracy, the device allows the use of two methods:

- Callendar-Van Dusen coefficients (Pt100 resistance thermometer)
  The Callendar-Van Dusen equation is described as:
  $R_T = R_0[1+AT+BT^2+C(T-100)T^3]$

  The coefficients A, B and C are used to match the sensor (platinum) and transmitter in order to improve the accuracy of the measuring system. The coefficients for a standard sensor are specified in IEC 751. If no standard sensor is available or if greater accuracy is required, the coefficients for each sensor can be determined specifically with the aid of sensor calibration.

- Linearization for copper/nickel resistance thermometers (RTD)
  The polynomial equation for copper/nickel is as follows:
  $R_T = R_0(1+AT+BT^2)$

  The coefficients A and B are used for the linearization of nickel or copper resistance thermometers (RTD). The exact values of the coefficients derive from the calibration data and are specific to each sensor. The sensor-specific coefficients are then sent to the transmitter.

Sensor-transmitter-matching using one of the methods explained above significantly improves the temperature measurement accuracy of the entire system. This is because the transmitter uses the specific data pertaining to the connected sensor to calculate the measured temperature, instead of using the standardized sensor curve data.

1-point adjustment (offset)

Shifts the sensor value

Current output adjustment

Correction of the 4 and/or 20 mA current output value.

Operating influences

The measured error data correspond to 2 σ (Gaussian distribution).

Influence of ambient temperature and supply voltage on operation for resistance thermometers (RTD) and resistance transmitters

Designation	**Standard**	**Ambient temperature: Influence (±) per 1 °C (1.8 °F) change**			**Supply voltage: Influence (±) per 1 V change**		
		Digital [1]		**D/A** [2]	**Digital** [1]		**D/A** [2]
		Maximum	Based on measured value		Maximum	Based on measured value	
Pt100 (1)	IEC 60751:2008	≤ 0.013 °C (0.023 °F)	0.0013% * (MV - LRV), at least 0.003 °C (0.005 °F)	0.003 %	≤ 0.007 °C (0.013 °F)	0.0007% * (MV - LRV), at least 0.003 °C (0.005 °F)	0.003 %
Pt200 (2)		≤ 0.017 °C (0.031 °F)	-		≤ 0.009 °C (0.016 °F)	-	

Designation	Standard	Ambient temperature: Influence (±) per 1 °C (1.8 °F) change			Supply voltage: Influence (±) per 1 V change		
		Digital [1]		D/A [2]	Digital [1]		D/A [2]
Pt500 (3)		≤ 0.008 °C (0.014 °F)	0.0013% * (MV - LRV), at least 0.006 °C (0.011 °F)		≤ 0.004 °C (0.007 °F)	0.0007% * (MV - LRV), at least 0.006 °C (0.011 °F)	
Pt1000 (4)		≤ 0.005 °C (0.009 °F)	-		≤ 0.003 °C (0.005 °F)	-	
Pt100 (5)	JIS C1604:1984	≤ 0.009 °C (0.016 °F)	0.0013% * (MV - LRV), at least 0.003 °C (0.005 °F)		≤ 0.004 °C (0.007 °F)	0.0007% * (MV - LRV), at least 0.003 °C (0.005 °F)	
Pt50 (8)	GOST 6651-94	≤ 0.017 °C (0.031 °F)	0.0015% * (MV - LRV), at least 0.01 °C (0.018 °F)		≤ 0.009 °C (0.016 °F)	0.0007% * (MV - LRV), at least 0.01 °C (0.018 °F)	
Pt100 (9)		≤ 0.013 °C (0.023 °F)	0.0013% * (MV - LRV), at least 0.003 °C (0.005 °F)		≤ 0.007 °C (0.013 °F)	0.0007% * (MV - LRV), at least 0.003 °C (0.005 °F)	
Ni100 (6)	DIN 43760 IPTS-68	≤ 0.003 °C (0.005 °F)	-	0.003 %	≤ 0.001 °C (0.002 °F)	-	0.003 %
Ni120 (7)			-			-	
Cu50 (10)	OIML R84: 2003 / GOST 6651-2009	≤ 0.005 °C (0.009 °F)	-		≤ 0.002 °C (0.004 °F)	-	
Cu100 (11)		≤ 0.004 °C (0.007 °F)	-			-	
Ni100 (12)		≤ 0.003 °C (0.005 °F)	-		≤ 0.001 °C (0.002 °F)	-	
Ni120 (13)			-			-	
Cu50 (14)	OIML R84: 2003 / GOST 6651-94	≤ 0.005 °C (0.009 °F)	-		≤ 0.002 °C (0.004 °F)	-	
Resistance transmitter (Ω)							
10 to 400 Ω		≤ 4 mΩ	0.001% * MV, at least 1 mΩ	0.003 %	≤ 2 mΩ	0.0005% * MV, at least 1 mΩ	0.003 %
10 to 2 000 Ω		≤ 20 mΩ	0.001% * MV, at least 10 mΩ		≤ 10 mΩ	0.0005% * MV, at least 5 mΩ	

1) Measured value transmitted via HART®.
2) Percentages based on the configured span of the analog output signal

Influence of ambient temperature and supply voltage on operation for thermocouples (TC) and voltage transmitters

Designation	Standard	Ambient temperature: Influence (±) per 1 °C (1.8 °F) change			Supply voltage: Influence (±) per 1 V change		
		Digital [1]		D/A [2]	Digital		D/A [2]
		Maximum	Based on measured value		Maximum	Based on measured value	
Type A (30)	IEC 60584-1/ ASTM E230-3	≤ 0.07 °C (0.126 °F)	0.003% * (MV - LRV), at least 0.01 °C (0.018 °F)	0.003 %	≤ 0.03 °C (0.054 °F)	0.0012% * (MV - LRV), at least 0.013 °C (0.023 °F)	0.003 %
Type B (31)		≤ 0.04 °C (0.072 °F)	-		≤ 0.02 °C (0.036 °F)	-	
Type C (32)	IEC 60584-1 / ASTM E230-3 ASTM E988-96	≤ 0.04 °C (0.072 °F)	0.0021% * (MV - LRV), at least 0.01 °C (0.018 °F)		≤ 0.02 °C (0.036 °F)	0.0012% * (MV - LRV), at least 0.013 °C (0.023 °F)	
Type D (33)	ASTM E988-96	≤ 0.04 °C (0.072 °F)	0.0019% * (MV - LRV), at least 0.01 °C (0.018 °F)		≤ 0.02 °C (0.036 °F)	0.0011% * (MV - LRV), at least 0.0 °C (0.0 °F)	
Type E (34)	IEC 60584-1 / ASTM E230-3	≤ 0.02 °C (0.036 °F)	0.0014% * (MV - LRV), at least 0.0 °C (0.0 °F)		≤ 0.01 °C (0.018 °F)	0.0008% * (MV - LRV), at least 0.0 °C (0.0 °F)	
Type J (35)			0.0014% * (MV - LRV), at least 0.0 °C (0.0 °F)			0.0008% * MV, at least 0.0 °C (0.0 °F)	

Designation	Standard	Ambient temperature: Influence (±) per 1 °C (1.8 °F) change			Supply voltage: Influence (±) per 1 V change		
		Digital [1]		D/A [2]	Digital		D/A [2]
Type K (36)		≤ 0.02 °C (0.036 °F)	0.0015% * (MV - LRV), at least 0.0 °C (0.0 °F)		≤ 0.01 °C (0.018 °F)	0.0009% * (MV - LRV), at least 0.0 °C (0.0 °F)	
Type N (37)			0.0014% * (MV - LRV), at least 0.010 °C (0.018 °F)			0.0008% * MV, at least 0.0 °C (0.0 °F)	
Type R (38)		≤ 0.03 °C (0.054 °F)	-		≤ 0.02 °C (0.036 °F)	-	
Type S (39)			-			-	
Type T (40)		≤ 0.01 °C (0.018 °F)	-	0.003 %	0.0 °C (0.0 °F)	-	0.003 %
Type L (41)	DIN 43710		-		≤ 0.01 °C (0.018 °F)	-	
Type U (42)	DIN 43710		-		0.0 °C (0.0 °F)	-	
Type L (43)	GOST R8.585-2001		-		≤ 0.01 °C (0.018 °F)	-	
Voltage transmitter (mV)				0.003 %			0.003 %
−20 to 100 mV	-	≤ 1.5 µV	0.0015% * MV		≤ 0.8 µV	0.0008% * MV	

1) Measured value transmitted via HART®.
2) Percentages based on the configured span of the analog output signal

MV = Measured value

LRV = Lower range value of relevant sensor

Total measured error of transmitter at current output = $\sqrt{(\text{Measured error digital}^2 + \text{Measured error D/A}^2)}$

Long-term drift, resistance thermometers (RTD) and resistance transmitters

Designation	Standard	Long-term drift (±) [1]				
		after 1 month	after 6 months	after 1 year	after 3 years	after 5 years
		Based on measured value				
Pt100 (1)	IEC 60751:2008	≤ 0.039% * (MV - LRV) or 0.01 °C (0.02 °F)	≤ 0.061% * (MV - LRV) or 0.02 °C (0.04 °F)	≤ 0.007% * (MV - LRV) or 0.02 °C (0.04 °F)	≤ 0.0093% * (MV - LRV) or 0.03 °C (0.05 °F)	≤ 0.0102% * (MV - LRV) or 0.03 °C (0.05 °F)
Pt200 (2)		0.05 °C (0.09 °F)	0.08 °C (0.14 °F)	0.09 °C (0.17 °F)	0.12 °C (0.27 °F)	0.13 °C (0.24 °F)
Pt500 (3)		≤ 0.048% * (MV - LRV) or 0.01 °C (0.02 °F)	≤ 0.0075% * (MV - LRV) or 0.02 °C (0.04 °F)	≤ 0.086% * (MV - LRV) or 0.03 °C (0.06 °F)	≤ 0.011% * (MV - LRV) or 0.03 °C (0.05 °F)	≤ 0.0124% * (MV - LRV) or 0.04 °C (0.07 °F)
Pt1000 (4)			≤ 0.0077% * (MV - LRV) or 0.02 °C (0.04 °F)	≤ 0.0088% * (MV - LRV) or 0.02 °C (0.04 °F)	≤ 0.0114% * (MV - LRV) or 0.03 °C (0.05 °F)	≤ 0.013% * (MV - LRV) or 0.03 °C (0.05 °F)
Pt100 (5)	JIS C1604:1984	≤ 0.039% * (MV - LRV) or 0.01 °C (0.02 °F)	≤ 0.0061% * (MV - LRV) or 0.02 °C (0.04 °F)	≤ 0.007% * (MV - LRV) or 0.02 °C (0.04 °F)	≤ 0.0093% * (MV - LRV) or 0.03 °C (0.05 °F)	≤ 0.0102% * (MV - LRV) or 0.03 °C (0.05 °F)
Pt50 (8)	GOST 6651-94	≤ 0.042% * (MV - LRV) or 0.02 °C (0.04 °F)	≤ 0.0068% * (MV - LRV) or 0.04 °C (0.07 °F)	≤ 0.0076% * (MV - LRV) or 0.04 °C (0.08 °F)	≤ 0.01% * (MV - LRV) or 0.06 °C (0.11 °F)	≤ 0.011% * (MV - LRV) or 0.07 °C (0.12 °F)
Pt100 (9)		≤ 0.039% * (MV - LRV) or 0.011 °C (0.012 °F)	≤ 0.0061% * (MV - LRV) or 0.02 °C (0.04 °F)	≤ 0.007% * (MV - LRV) or 0.02 °C (0.04 °F)	≤ 0.0093% * (MV - LRV) or 0.03 °C (0.05 °F)	≤ 0.0102% * (MV - LRV) or 0.03 °C (0.05 °F)
Ni100 (6)	DIN 43760 IPTS-68	0.01 °C (0.02 °F)	0.01 °C (0.02 °F)	0.02 °C (0.04 °F)	0.02 °C (0.04 °F)	0.02 °C (0.04 °F)

Designation	Standard	Long-term drift (±) [1]				
Ni120 (7)						
Cu50 (10)	OIML R84: 2003 / GOST 6651-2009	0.02 °C (0.04 °F)	0.03 °C (0.05 °F)	0.04 °C (0.07 °F)	0.05 °C (0.09 °F)	0.05 °C (0.09 °F)
Cu100 (11)		0.01 °C (0.02 °F)	0.02 °C (0.04 °F)	0.02 °C (0.04 °F)	0.03 °C (0.05 °F)	0.04 °C (0.07 °F)
Ni100 (12)			0.01 °C (0.02 °F)	0.02 °C (0.04 °F)	0.02 °C (0.04 °F)	0.02 °C (0.04 °F)
Ni120 (13)						
Cu50 (14)	OIML R84: 2003 / GOST 6651-94	0.02 °C (0.04 °F)	0.03 °C (0.05 °F)	0.04 °C (0.07 °F)	0.05 °C (0.09 °F)	0.05 °C (0.09 °F)
Resistance transmitter						
10 to 400 Ω		≤ 0.003% * MV or 4 mΩ	≤ 0.0048% * MV or 6 mΩ	≤ 0.0055% * MV or 7 mΩ	≤ 0.0073% * MV or 10 mΩ	≤ 0.008% * (MV - LRV) or 11 mΩ
10 to 2 000 Ω		≤ 0.0038% * MV or 25 mΩ	≤ 0.006% * MV or 40 mΩ	≤ 0.007% * (MV - LRV) or 47 mΩ	≤ 0.009% * (MV - LRV) or 60 mΩ	≤ 0.0067% * (MV - LRV) or 67 mΩ

1) The larger value is valid

Long-term drift, thermocouples (TC) and voltage transmitters

Designation	Standard	Long-term drift (±) [1]				
		after 1 month	after 6 months	after 1 year	after 3 years	after 5 years
		Based on measured value				
Type A (30)	IEC 60584-1 / ASTM E230-3	≤ 0.021% * (MV - LRV) or 0.34 °C (0.61 °F)	≤ 0.037% * (MV - LRV) or 0.59 °C (1.06 °F)	≤ 0.044% * (MV - LRV) or 0.70 °C (1.26 °F)	≤ 0.058% * (MV - LRV) or 0.93 °C (1.67 °F)	≤ 0.063% * (MV - LRV) or 1.01 °C (1.82 °F)
Type B (31)		0.80 °C (1.44 °F)	1.40 °C (2.52 °F)	1.66 °C (2.99 °F)	2.19 °C (3.94 °F)	2.39 °C (4.30 °F)
Type C (32)	IEC 60584-1 / ASTM E230-3 ASTM E988-96	0.34 °C (0.61 °F)	0.58 °C (1.04 °F)	0.70 °C (1.26 °F)	0.92 °C (1.66 °F)	1.00 °C (1.80 °F)
Type D (33)	ASTM E988-96	0.42 °C (0.76 °F)	0.73 °C (1.31 °F)	0.87 °C (1.57 °F)	1.15 °C (2.07 °F)	1.26 °C (2.27 °F)
Type E (34)	IEC 60584-1 / ASTM E230-3	0.13 °C (0.23 °F)	0.22 °C (0.40 °F)	0.26 °C (0.47 °F)	0.34 °C (0.61 °F)	0.37 °C (0.67 °F)
Type J (35)		0.15 °C (0.27 °F)	0.26 °C (0.47 °F)	0.31 °C (0.56 °F)	0.41 °C (0.74 °F)	0.44 °C (0.79 °F)
Type K (36)		0.17 °C (0.31 °F)	0.30 °C (0.54 °F)	0.36 °C (0.65 °F)	0.47 °C (0.85 °F)	0.51 °C (0.92 °F)
Type N (37)		0.25 °C (0.45 °F)	0.44 °C (0.79 °F)	0.52 °C (0.94 °F)	0.69 °C (1.24 °F)	0.75 °C (1.35 °F)
Type R (38)		0.62 °C (1.12 °F)	1.08 °C (1.94 °F)	1.28 °C (2.30 °F)	1.69 °C (3.04 °F)	1.85 °C (3.33 °F)
Type S (39)				1.29 °C (2.32 °F)	1.70 °C (3.06 °F)	
Type T (40)		0.18 °C (0.32 °F)	0.32 °C (0.58 °F)	0.38 °C (0.68 °F)	0.50 °C (0.90 °F)	0.54 °C (0.97 °F)
Type L (41)	DIN 43710	0.12 °C (0.22 °F)	0.21 °C (0.38 °F)	0.25 °C (0.45 °F)	0.33 °C (0.59 °F)	0.36 °C (0.65 °F)
Type U (42)		0.18 °C (0.32 °F)	0.31 °C (0.56 °F)	0.37 °C (0.67 °F)	0.49 °C (0.88 °F)	0.53 °C (0.95 °F)
Type L (43)	GOST R8.585-2001	0.15 °C (0.27 °F)	0.26 °C (0.47 °F)	0.31 °C (0.56 °F)	0.41 °C (0.74 °F)	0.44 °C (0.79 °F)

Designation	Standard	Long-term drift (±) [1]				
Voltage transmitter (mV)						
−20 to 100 mV		≤ 0.012% * MV or 4 µV	≤ 0.021% * MV or 7 µV	≤ 0.025% * MV or 8 µV	≤ 0.033% * MV or 11 µV	≤ 0.036% * MV or 12 µV

1) The larger value is valid

Analog output long-term drift

D/A long-term drift [1] (±)				
after 1 month	after 6 months	after 1 year	after 3 years	after 5 years
0.018%	0.026%	0.030%	0.036%	0.038%

1) Percentages based on the configured span of the analog output signal.

Influence of the reference junction

Pt100 DIN IEC 60751 Cl. B (internal reference junction with thermocouples TC)

If an external RTD Pt100 2-wire sensor is used for the reference junction measurement, the measured error caused by the transmitter is < 0.5 °C (0.9 °F). The measured error of the sensor element also needs to be added.

Installation

Mounting location

If stable sensors are used, the device can be fitted directly to the sensor. For remote mounting on a wall or stand pipe, a mounting bracket is available. The illuminated display can be mounted in four different positions.

Installation instructions

Direct sensor mounting

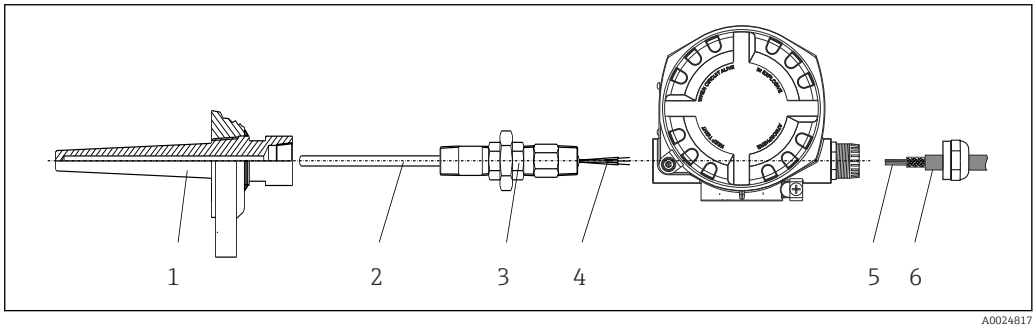

5 Direct field transmitter mounting on sensor

1 Thermowell
2 Insert
3 Neck tube nipple and adapter
4 Sensor cables
5 Fieldbus cables
6 Fieldbus shielded cable

Remote mounting

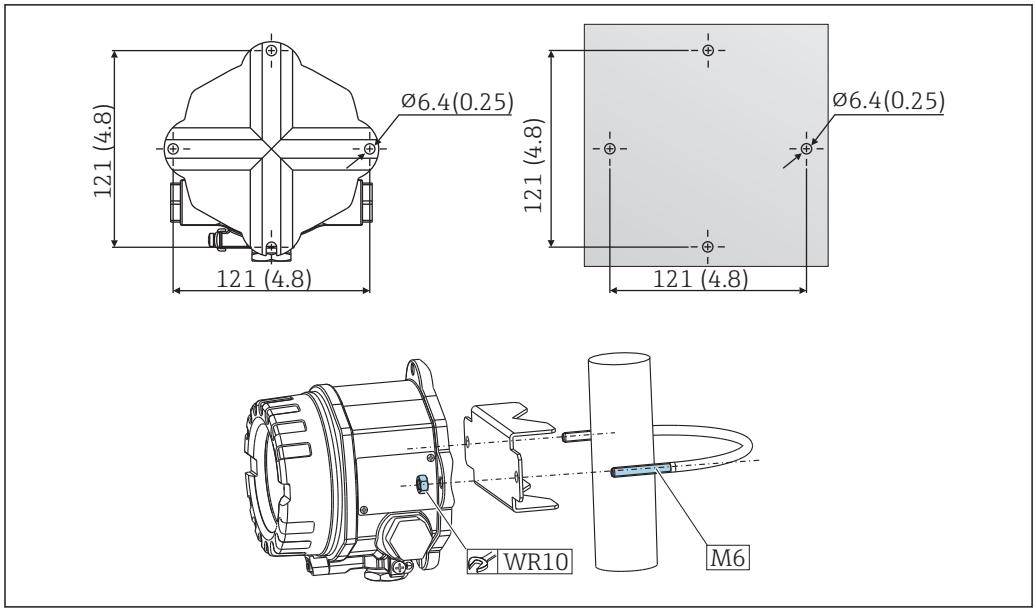

6 *For wall mounting of the field transmitter or pipe mounting with a 2" pipe mounting bracket as an accessory, see the "Accessories" section. Dimensions in mm (in)*

Display mounting

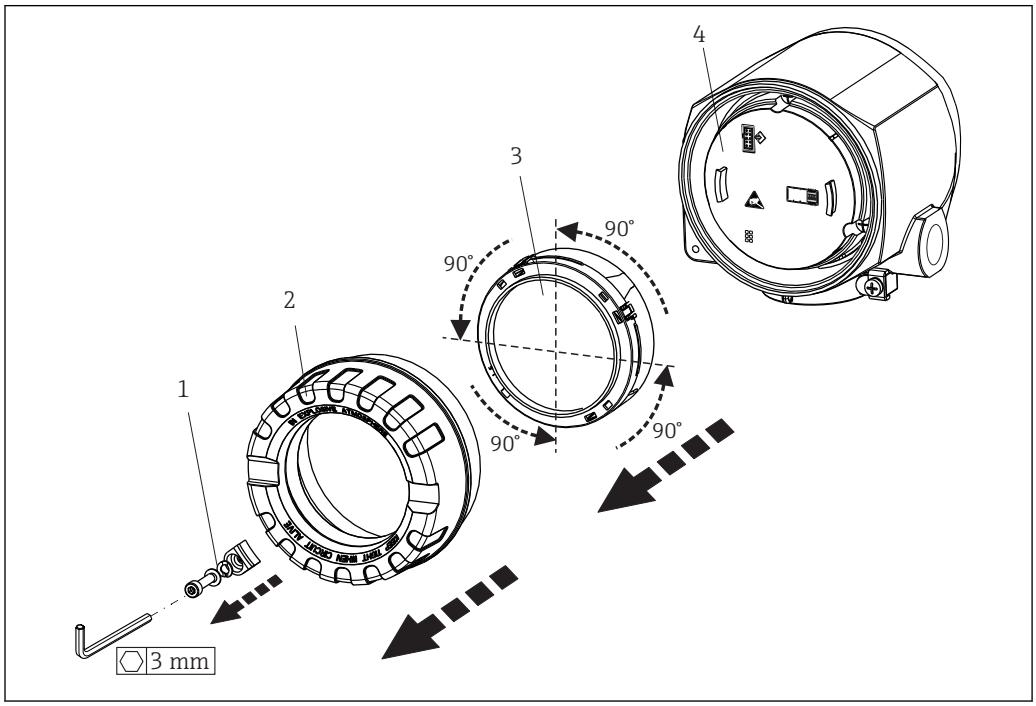

7 *4 display installation positions, attachable in 90° stages*

1 *Cover clamp*
2 *Housing cover with O-ring*
3 *Display with fitting kit and twist protection*
4 *Electronics module*

Environment

Ambient temperature

- −40 to +85 °C (−40 to +185 °F), for hazardous areas see Ex documentation
- Without display: −40 to +85 °C (−40 to +185 °F)
- With display: −40 to +80 °C (−40 to +176 °F)
- With overvoltage protection module: −40 to +85 °C (−40 to +185 °F)

The display can react slowly at temperatures < −20 °C (−4 °F). The legibility of the display cannot be guaranteed at temperatures < −30 °C (−22 °F).

Storage temperature

- Without display:
- With display: −40 to +80 °C (−40 to +176 °F)
- With overvoltage protection module: −50 to +100 °C (−58 to +212 °F)

Humidity

Permitted: 0 to 95 %

Altitude

Up to 4 000 m (13 123 ft) above sea level

Climate class

As per IEC 60654-1, Class Dx

Degree of protection

Die-cast aluminum or stainless steel housing: IP66/67, Type 4X

Shock and vibration resistance

Shock resistance according to DIN EN 60068-2-27 and KTA 3505 (Section 5.8.4 shock test): 30g / 18 ms

Vibration resistance according to DIN EN 60068-2-6:
- 2 to 8.6 Hz / 10 mm
- 8.6 to 150 Hz / 3g

The use of L-shaped mounting brackets can cause resonance (see pipe 2" mounting bracket in the 'Accessories' section). Caution: vibrations at the transmitter may not exceed specifications.

Electromagnetic compatibility (EMC)

CE compliance

Electromagnetic compatibility in accordance with all the relevant requirements of the IEC/EN 61326 series and NAMUR Recommendation EMC (NE21). For details, refer to the Declaration of Conformity.

Maximum measured error <1% of measuring range.

Interference immunity as per IEC/EN 61326 series, industrial requirements

Interference emission as per IEC/EN 61326 series, Class B equipment

A shielded cable that is grounded on both sides must be used for sensor cable lengths of 30 m (98.4 ft) and more. The use of shielded sensor cables is generally recommended.

Connection of the functional grounding may be needed for functional purposes. Compliance with the electrical codes of individual countries is mandatory.

Overvoltage category

II

Degree of contamination

2

Mechanical construction

Design, dimensions

Dimensions in mm (in)

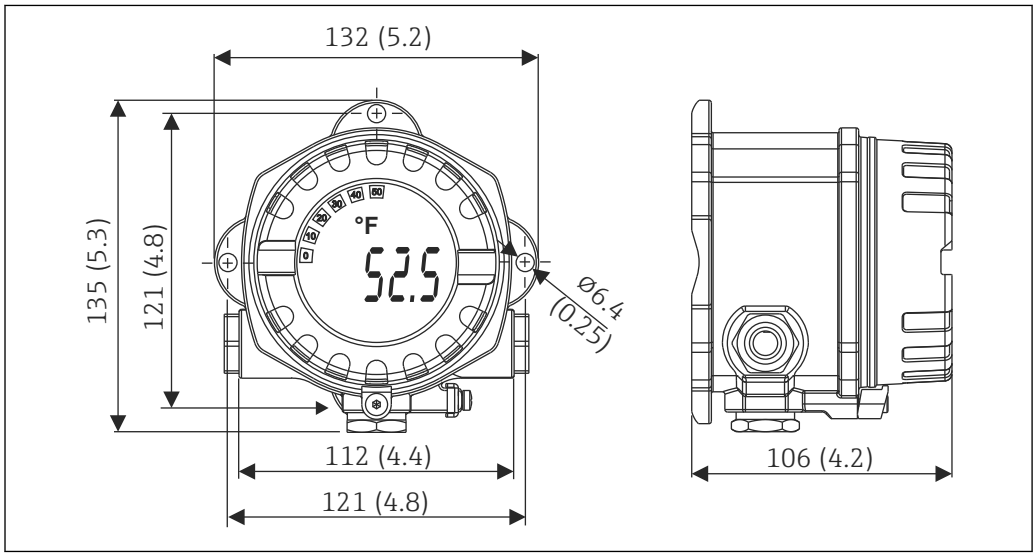

8 Die-cast aluminum housing for general applications, or optional stainless steel housing (316L)

- Electronics module and connection compartment
- Display attachable in 90° stages

Weight

- Aluminum housing approx. 1.4 kg (3 lb), with display
- Stainless steel housing approx. 4.2 kg (9.3 lb), with display

Materials

Housing	Sensor terminals	Nameplate
Die-cast aluminum housing AlSi10Mg/ AlSi12 with powder coating on polyester base	Nickel-plated brass 0.3 µm gold flashed / cpl., corrosion-free	Aluminum AlMgl, anodized in black
316L		1.4404 (AISI 316L)
O-ring 88x3 HNBR 70° Shore PTFE coating	-	-

Cable entries

Version	Type
Thread	3x thread ½" NPT
	3x thread M20
	3x thread G½"

Operability

Operating concept

There are different options available for configuring and commissioning the device:

- **Configuration programs**
  The setup and the configuration of device-specific parameters is performed via the HART® protocol. Special configuration and operating programs are available from various manufacturers for this purpose.
- **Miniature switch (DIP switch) for diverse hardware settings**
  Hardware write protection or the Bluetooth® function is activated and deactivated via a miniature switch (DIP switch) on the electronics module.

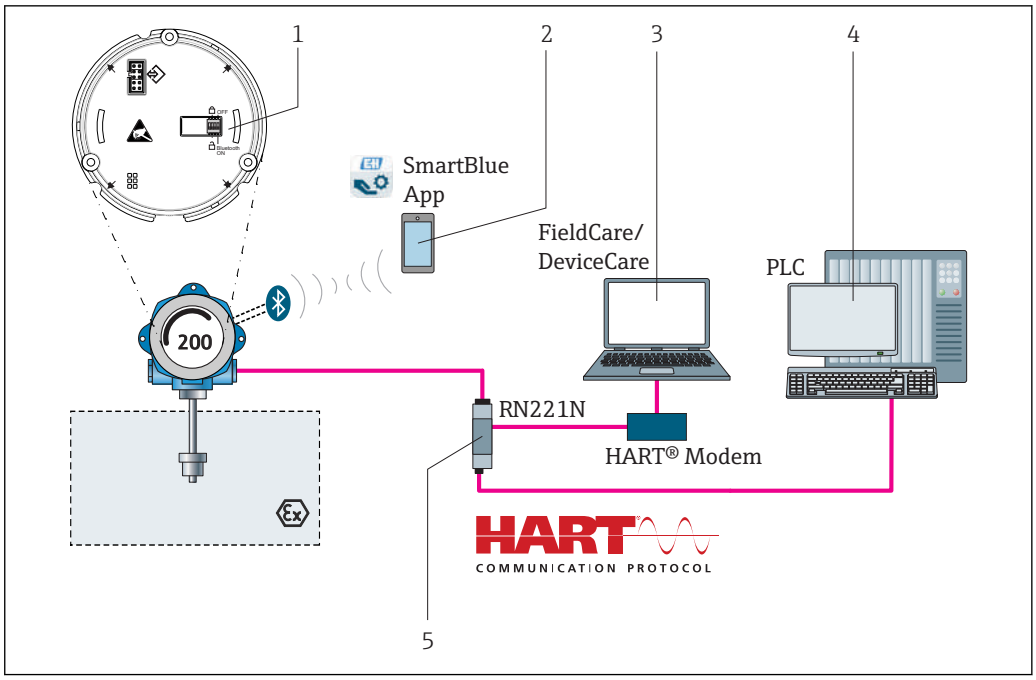

9 *Operating options of device*

1 *Hardware settings via DIP switches*
2 *Device configuration via Bluetooth® wireless technology*
3 *Configuration software, e.g. FieldCare*
4 *PLC*
5 *Power supply unit and active barrier, .e.g. RN221 from Endress+Hauser*

Local operation

Display elements

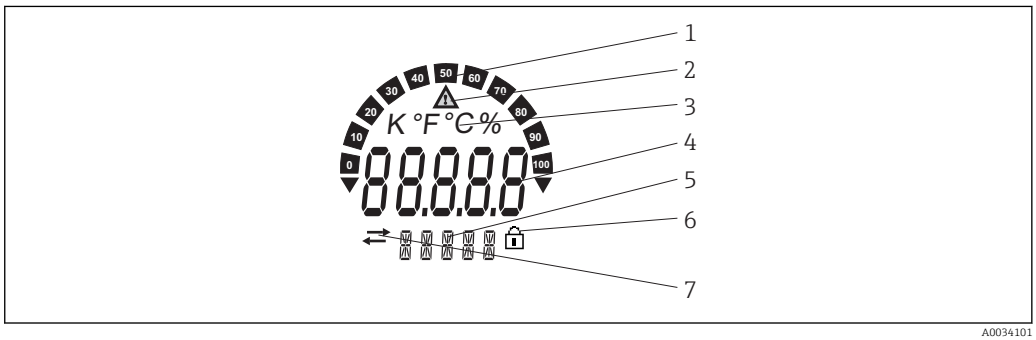

10 *LC display of the field transmitter (backlit, attachable in 90° stages)*

1 *Bar graph display*
2 *'Caution' symbol*
3 *Unit display K, °F, °C or %*
4 *Measured value display, digit height 20.5 mm*
5 *Status and information display*
6 *'Configuration locked' symbol*
7 *'Communication' symbol*

Operating elements

To prevent device manipulation, no operating elements are present directly on the display. Various operating elements for configuring the device are located on the electronics module, which is located behind the display.

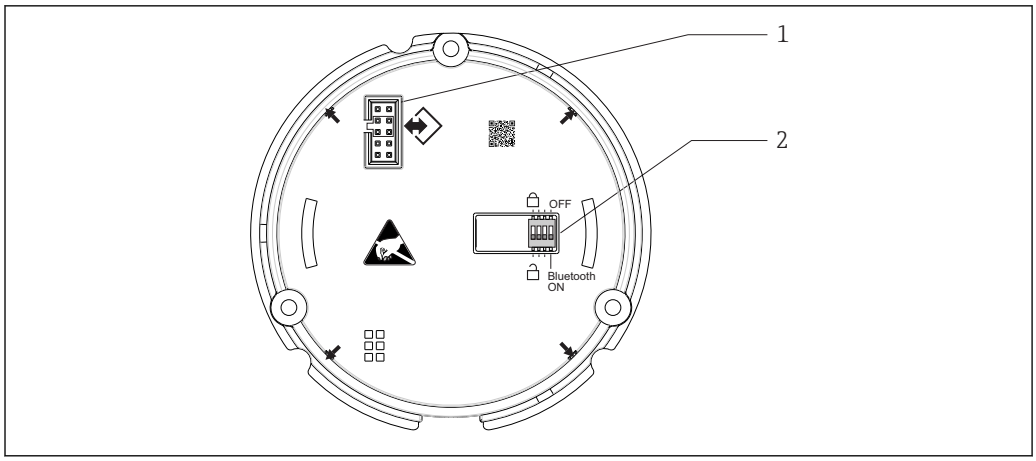

1 Electrical connection for the display module
2 DIP switch for activating and deactivating the device write protection and Bluetooth® wireless technology interface

Remote operation

The configuration of HART® functions and device-specific parameters takes place via the device's HART® communication. There are special configuration tools from different manufacturers available for this purpose. For more information, contact your Endress+Hauser sales representative.

Bluetooth® wireless technology

The device has an optional Bluetooth® wireless technology interface and can be operated and configured using the SmartBlue app.

- The range under reference conditions is:
  - 25 m (82 ft) for housing with display window
  - 10 m (33 ft) for housing without display window
- Incorrect operation by unauthorized persons is prevented by means of encrypted communication and password encryption.
- The Bluetooth® wireless technology interface can be deactivated.

Certificates and approvals

CE mark

The product meets the requirements of the harmonized European standards. As such, it complies with the legal specifications of the EC directives. The manufacturer confirms successful testing of the product by affixing to it the CE-mark.

EAC mark

The product meets the legal requirements of the EEU guidelines. The manufacturer confirms the successful testing of the product by affixing the EAC mark.

Ex approvals

More information on the hazardous area versions currently available (ATEX, FM, CSA, etc.) is available from your Endress+Hauser sales center. Separate Ex documentation contain all the data relevant for explosion protection.

CSA C/US

The product complies with the requirements of "CLASS 2252 06 - Process Control Equipment" and "CLASS 2252 86 - Process Control Equipment - Certified to US Standards".

HART® certification

The temperature transmitter is registered by the FieldComm Group. The device meets the requirements of the HART® Communication Protocol Specifications, Revision 7.

Radio approval

The device has Bluetooth® radio approval in accordance with the Radio Equipment Directive (RED) for Europe and the Federal Communications Commission (FCC) 15.247 for North America.

Europe	
This device meets the requirements of the Telecommunications Directive RED 2014/53/EU:	▪ EN 300 328 ▪ EN 301 489-1 ▪ EN 301 489-17

Canada and United States	
English: This device complies with Part 15 of the FCC Rules and with Industry Canada licenceexempt RSS standard(s). Operation is subject to the following two conditions: ▪ This device may not cause harmful interference, and ▪ This device must accept any interference received, including interference that may cause undesired operation. Changes or modifications made to this equipment not expressly approved by Endress+Hauser may void the user's authorization to operate this equipment. This equipment has been tested and found to comply with the limits for a Class B digital device, pursuant to part 15 of the FCC Rules. These limits are designed to provide reasonable protection against harmful interference in a residential installation. This equipment generates, uses and can radiate radio frequency energy and, if not installed and used in accordance with the instructions, may cause harmful interference to radio communications. However, there is no guarantee that interference will not occur in a particular installation. If this equipment does cause harmful interference to radio or television reception, which can be determined by turning the equipment off and on, the user is encouraged to try to correct the interference by one or more of the following measures: ▪ Reorient or relocate the receiving antenna. ▪ Increase the separation between the equipment and receiver. ▪ Connect the equipment into an outlet on a circuit different from that to which the receiver is connected. ▪ Consult the dealer or an experienced radio/TV technician for help. This equipment complies with FCC and IC radiation exposure limits set forth for an uncontrolled environment. This equipment should be installed and operated with minimum distance 20cm between the radiator and your body.	Français: Le présent appareil est conforme aux CNR d'industrie Canada applicables aux appareils radio exempts de licence. L'exploitation est autorisée aux deux conditions suivantes : ▪ L'appareil ne doit pas produire de brouillage, et ▪ L'utilisateur de l'appareil doit accepter tout brouillage radioélectrique subi, même si le brouillage est susceptible d'en compromettre le fonctionnement. Les changements ou modifications apportées à cet appareil non expressément approuvée par Endress +Hauser peut annuler l'autorisation de l'utilisateur d'opérer cet appareil. Déclaration d'exposition aux radiations: Cet équipement est conforme aux limites d'exposition aux rayonnements IC établies pour un environnement non contrôlé. Cet équipement doit être installé et utilisé avec un minimum de 20 cm de distance entre la source de rayonnement et votre corps.

MTTF

- Without Bluetooth® wireless technology: 152 years
- With Bluetooth® wireless technology: 114 years

According to Siemens SN-29500 at 40 °C (104 °F)

The mean time to failure (MTTF) denotes the theoretically expected time until the device fails during normal operation. The term MTTF is used for non-repairable systems such as temperature transmitters.

Ordering information

Detailed ordering information is available for your nearest sales organization www.addresses.endress.com or in the Product Configurator under www.endress.com :

1. Click Corporate

2. Select the country
3. Click Products
4. Select the product using the filters and search field
5. Open the product page

The Configuration button to the right of the product image opens the Product Configurator.

Product Configurator - the tool for individual product configuration
- Up-to-the-minute configuration data
- Depending on the device: Direct input of measuring point-specific information such as measuring range or operating language
- Automatic verification of exclusion criteria
- Automatic creation of the order code and its breakdown in PDF or Excel output format
- Ability to order directly in the Endress+Hauser Online Shop

Accessories

Various accessories, which can be ordered with the device or subsequently from Endress+Hauser, are available for the device. Detailed information on the order code in question is available from your local Endress+Hauser sales center or on the product page of the Endress+Hauser website: www.endress.com.

Always quote the serial number of the device when ordering accessories!

Device-specific accessories

Accessories	Description
Dummy plug	▪ M20x1.5 Ex-d ▪ G ½" Ex-d ▪ ½" NPT
Cable glands	▪ M20x1.5 ▪ NPT ½" D4-8.5, IP68
Adapter for cable gland	M20x1.5 male/M24x1.5 female
Pipe mounting bracket	For 2" pipe 316L
Overvoltage protection	The module protects the electronics from overvoltage.

Communication-specific accessories

Accessories	Description
Commubox FXA195 HART	For intrinsically safe HART® communication with FieldCare via the USB interface. For details, see Technical Information TI404F/00
Commubox FXA291	Connects Endress+Hauser field devices with a CDI interface (= Endress+Hauser Common Data Interface) and the USB port of a computer or laptop. For details, see Technical Information TI405C/07
WirelessHART adapter	Is used for the wireless connection of field devices. The WirelessHART® adapter can be easily integrated into field devices and existing infrastructures, offers data protection and transmission safety and can be operated in parallel with other wireless networks. For details, see Operating Instructions BA061S/04
Field Xpert SMT70	Universal, high-performance tablet PC for device configuration The tablet PC enables mobile plant asset management in hazardous and non-hazardous areas. It is suitable for commissioning and maintenance staff to manage field instruments with a digital communication interface and to record progress. This tablet PC is designed as a comprehensive, all-in-one solution. With a pre-installed driver library, it is an easy-to-use, touch-sensitive tool which can be used to manage field instruments throughout their entire life cycle. For details, see Technical Information TI01342S/04

Service-specific accessories

Accessories	Description
Applicator	Software for selecting and sizing Endress+Hauser measuring devices: ▪ Calculation of all the necessary data for identifying the optimum measuring device: e.g. pressure loss, accuracy or process connections. ▪ Graphic illustration of the calculation results Administration, documentation and access to all project-related data and parameters over the entire life cycle of a project. Applicator is available: Via the Internet: https://portal.endress.com/webapp/applicator

Accessories	Description
Configurator	Product Configurator - the tool for individual product configuration ▪ Up-to-the-minute configuration data ▪ Depending on the device: Direct input of measuring point-specific information such as measuring range or operating language ▪ Automatic verification of exclusion criteria ▪ Automatic creation of the order code and its breakdown in PDF or Excel output format ▪ Ability to order directly in the Endress+Hauser Online Shop The Configurator is available on the Endress+Hauser website at: www.endress.com -> Click "Corporate" -> Select your country -> Click "Products" -> Select the product using the filters and search field -> Open product page -> The "Configure" button to the right of the product image opens the Product Configurator.

DeviceCare SFE100	Configuration tool for devices via fieldbus protocols and Endress+Hauser service protocols. DeviceCare is the tool developed by Endress+Hauser for the configuration of Endress+Hauser devices. All smart devices in a plant can be configured via a point-to-point or point-to-bus connection. The user-friendly menus enable transparent and intuitive access to the field devices. For details, see Operating Instructions BA00027S

FieldCare SFE500	FDT-based plant asset management tool from Endress+Hauser. It can configure all smart field units in your system and helps you manage them. By using the status information, it is also a simple but effective way of checking their status and condition. For details, see Operating Instructions BA00027S and BA00065S

Accessories	Description
W@M	Life cycle management for your plant W@M offers assistance with a wide range of software applications over the entire process: from planning and procurement to the installation, commissioning and operation of the measuring devices. All the relevant information is available for every measuring device over the entire life cycle, such as the device status, device-specific documentation, spare parts etc. The application already contains the data of your Endress+Hauser device. Endress+Hauser also takes care of maintaining and updating the data records. W@M is available: Via the Internet: www.endress.com/lifecyclemanagement

System products

Accessories	Description
RN221N	Active barrier with power supply for safe separation of 4 to 20 mA standard signal circuits. Has bidirectional HART® transmission and optional HART® diagnostics if transmitters are connected with monitoring of 4 to 20 mA signal or HART® status byte analysis and an E+H-specific diagnostic command. For details, see Technical Information TI073R/09
RIA15	Process display, digital loop-powered display for 4 to 20 mA circuit, panel mounting, with optional HART® communication. Displays 4 to 20 mA or up to 4 HART® process variables For details, see Technical Information TI01043K/09
Graphic Data Manager Memograph M	The Advanced Data Manager Memograph M is a flexible and powerful system for organizing process values. Optional HART® input cards are available, each with 4 inputs (4/8/12/16/20), with highly accurate process values from the HART® devices directly connected for the purpose of calculation and data logging. The measured process values are clearly presented on the display and logged safely, monitored for limit values and analyzed. Via common communication protocols, the measured and calculated values can be easily communicated to higher-level systems or individual plant modules can be interconnected. For details, see Technical Information TI01180R/09

Supplementary documentation

- Operating Instructions (BA00191R) and related printed copy of Brief Operating Instructions (KA00222R)
- Supplementary ATEX documentation:
  - ATEX/IECEx: II1G Ex ia IIC T6...T4 Ga: XA01957T
  - II1G Ex ia IIC; II2D Ex ia IIIC: XA01958T
  - ATEX: II3G Ex ic IIC T6 Gc, II3G Ex nA IIC T6 Gc, II3D Ex tc IIIC Dc: XA02090T
- Supplementary documentation CSA:
  XP, DIP, NI: XA01977T/09
  Intrinsic safety: XA01979T/09

71514785

www.addresses.endress.com

Endress+Hauser
People for Process Automation