DATASHEET - NZM1/2-XV6



Extension shaft, for max. mounting depth = 600mm

Part no. NZM1/2-XV6
Catalog No. 260191

EL-Nummer (Norway) 0004358730

Delivery program

Product range			Accessories
Accessories			Extension shaft
Standard/Approval			UL/CSA, IEC
Construction size			NZM1/2
Description			Length 490 mm, can be cut to desired length
Equipment supplied			Extension shaft, 1 pc.
Function			600 mm max. built-in depth
For use with			NZM1(-4), PN1(-4), N(S)1(-4) NZM2(-4), PN2(-4), N(S)2(-4)

Design verification as per IEC/EN 61439

IEC/EN 61439 design verification			
10.2 Strength of materials and parts			
10.2.2 Corrosion resistance			Meets the product standard's requirements.
10.2.3.1 Verification of thermal stability of enclosures			Meets the product standard's requirements.
10.2.3.2 Verification of resistance of insulating materials to normal heat			Meets the product standard's requirements.
10.2.3.3 Verification of resistance of insulating materials to abnormal heat and fire due to internal electric effects			Meets the product standard's requirements.
10.2.4 Resistance to ultra-violet (UV) radiation			Meets the product standard's requirements.
10.2.5 Lifting			Does not apply, since the entire switchgear needs to be evaluated.
10.2.6 Mechanical impact			Does not apply, since the entire switchgear needs to be evaluated.
10.2.7 Inscriptions			Meets the product standard's requirements.
10.3 Degree of protection of ASSEMBLIES			Does not apply, since the entire switchgear needs to be evaluated.
10.4 Clearances and creepage distances			Meets the product standard's requirements.
10.5 Protection against electric shock			Does not apply, since the entire switchgear needs to be evaluated.
10.6 Incorporation of switching devices and components			Does not apply, since the entire switchgear needs to be evaluated.
10.7 Internal electrical circuits and connections			Is the panel builder's responsibility.
10.8 Connections for external conductors			Is the panel builder's responsibility.
10.9 Insulation properties			
10.9.2 Power-frequency electric strength			Is the panel builder's responsibility.
10.9.3 Impulse withstand voltage			Is the panel builder's responsibility.
10.9.4 Testing of enclosures made of insulating material			Is the panel builder's responsibility.
10.10 Temperature rise			The panel builder is responsible for the temperature rise calculation. Eaton will provide heat dissipation data for the devices.
10.11 Short-circuit rating			Is the panel builder's responsibility. The specifications for the switchgear must be observed.
10.12 Electromagnetic compatibility			Is the panel builder's responsibility. The specifications for the switchgear must be observed.
10.13 Mechanical function			The device meets the requirements, provided the information in the instruction leaflet (IL) is observed.

Technical data ETIM 7.0

Low-voltage industrial components (EG000017) / Switch operating shaft (EC000916)			
Electric engineering, automation, process control engineering / Low-voltage switch technology / Circuit breaker (LV < 1 kV) / Switch axle (ecl@ss10.0.1-27-37-04-13 [AKF011013])			
Length		mm	490
Cross section height		mm	8
Cross section width		mm	8

Approvals

North America Certification	UL/CSA certification not required

Dimensions

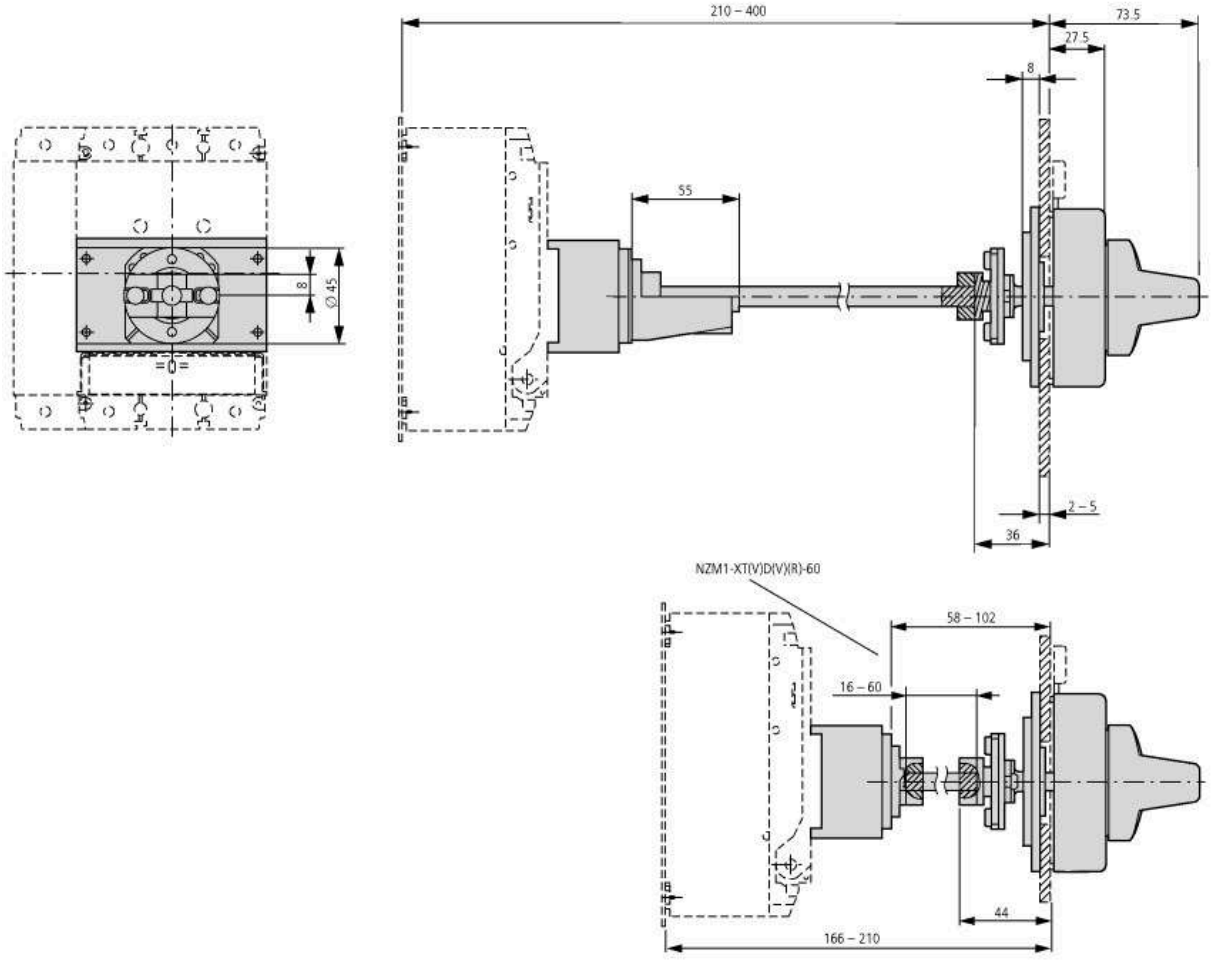

in connection with NZM1-XT(V)D(V)(R) door coupling rotary handle

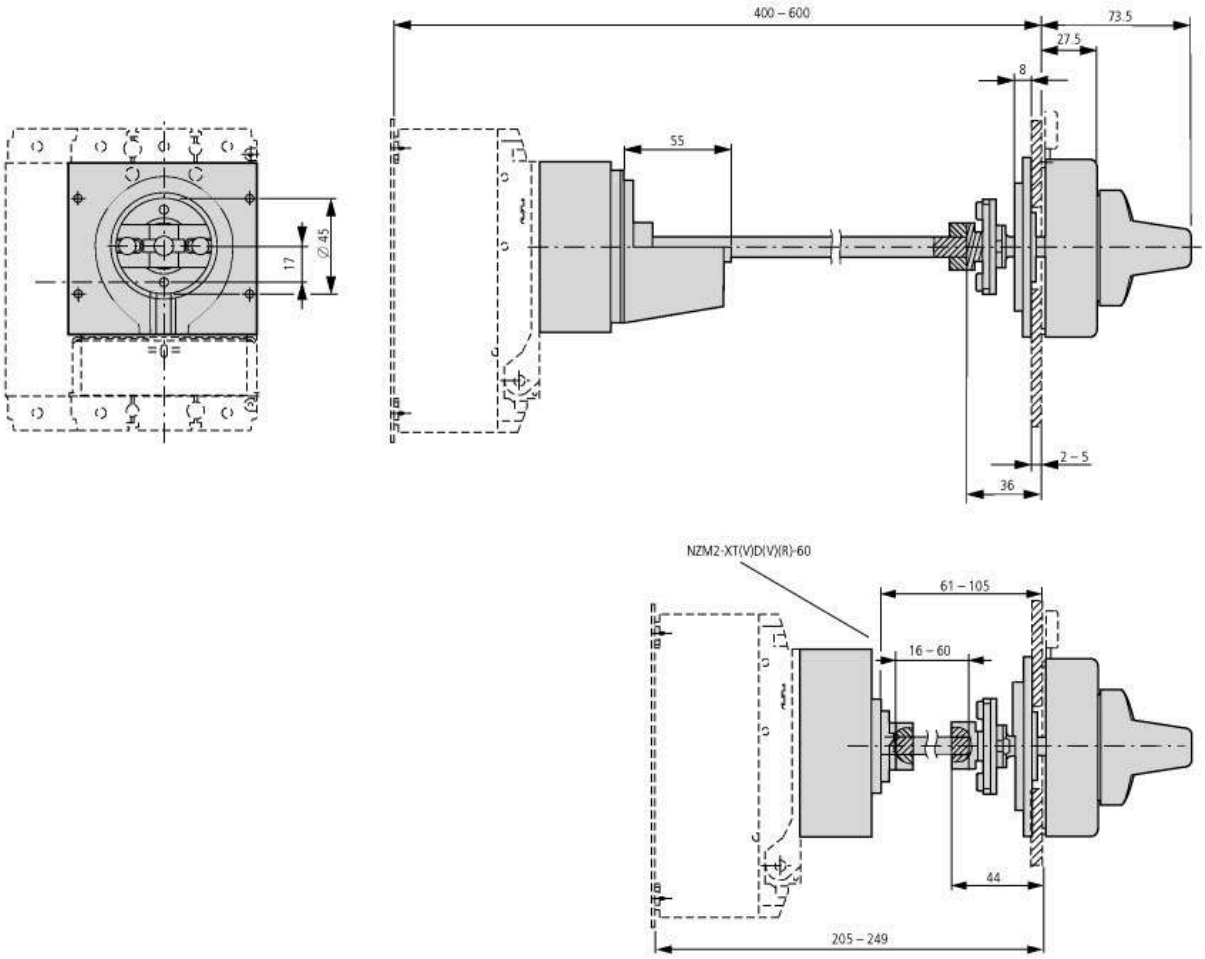

in connection with NZM2-XT(V)D(V)(R) door coupling rotary handle

© 02/2021 by Eaton Industries GmbH