180-200 CFM



Model	P/N	Bearing (● VAPO ○ BALL ◉ Sleeve)	Rating Voltage (VAC)	Freq. (Hz)	Power Current (AMP)	Power Consumption (WATTS)	Speed (RPM)	Air Flow (CFM)	Static Pressure (Inch-H_2O)	Noise (dBA)	Weight (g)
A1175-HBL	T.GN	○	115	50/60	0.59/0.48	39/36	2650/2950	180/200	0.48/0.38	52/55	957
A1175-HBT	T.GN	○	115	50/60	0.59/0.48	39/36	2650/2950	180/200	0.48/0.38	52/55	957
A2175-HBL	T.GN	○	220-240	50/60	0.28/0.24	39/36	2650/2950	180/200	0.48/0.38	52/55	957
A2175-HBT	T.GN	○	220-240	50/60	0.28/0.24	39/36	2650/2950	180/200	0.48/0.38	52/55	957

Frame : Aluminum alloy

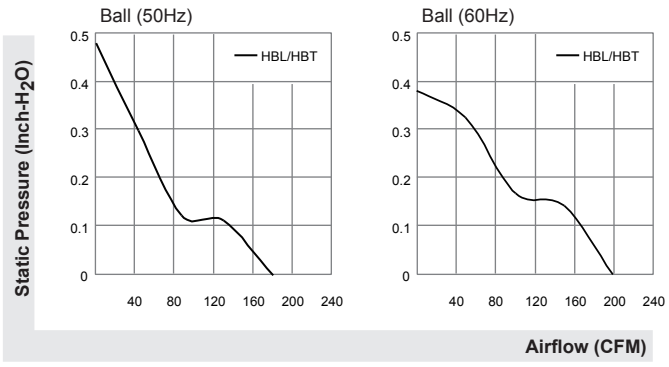

UNITS:mm

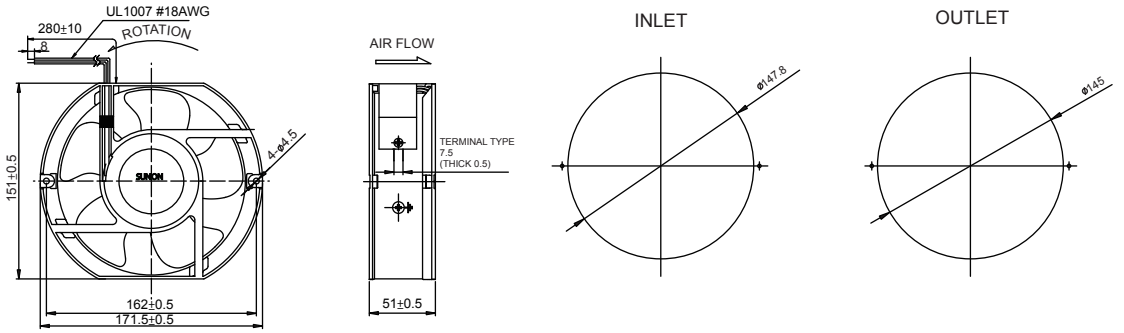

*All model could be customized on voltage or any other requirements to fit your need.
*Specifications subject to change without notice. Please Visit SUNON web site at http://www.sunon.com for update information.