OT5008

Through-beam sensor transmitter

OTS-OOKG/US-100

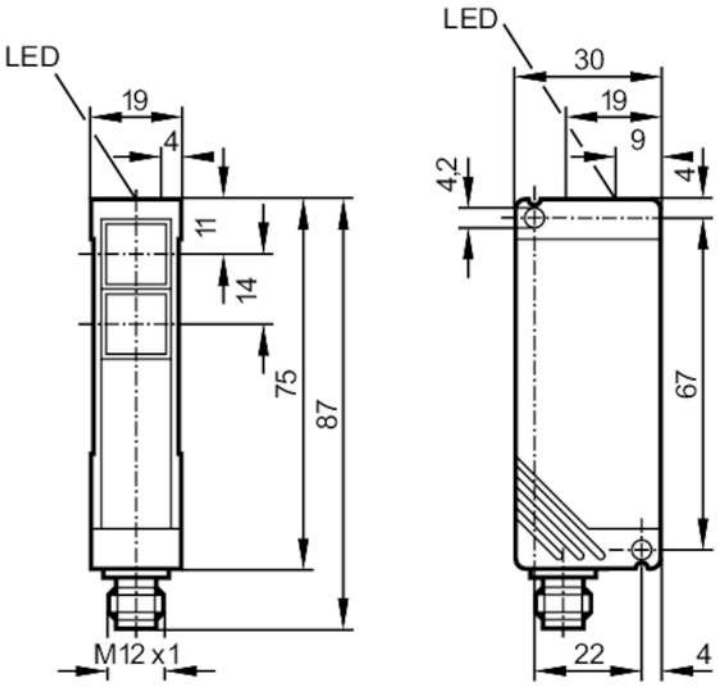

one transmitting diode each in upper and lower lens

Product characteristics		
Type of light		infrared light
Housing		rectangular
Application		
Function principle		Through-beam sensor
Electrical data		
Operating voltage	[V]	10...50 DC
Current consumption	[mA]	20; ((24 V))
Protection class		II
Reverse polarity protection		yes
Type of light		infrared light
Wave length	[nm]	880
Detection zone		
Transmitter / receiver		transmitter
Range	[m]	< 10
Range adjustable		no
Max. light spot diameter	[mm]	524
Light spot dimensions refer to		at maximum range
Operating conditions		
Ambient temperature	[°C]	-25...60
Protection		IP 65

OT5008

Through-beam sensor transmitter

OTS-OOKG/US-100

Tests / approvals			
EMC		EN 60947-5-2	
		EN 55011	class B
MTTF	[years]	1862	
Mechanical data			
Weight	[g]	153	
Housing		rectangular	
Materials		PBT	
Lens material		PMMA	
Lens alignment		side lens	
Displays / operating elements			
Display		operation	1 x LED, green
Accessories			
Items supplied		Angle bracket: 1, E20461	
		screwdrivers	
Remarks			
Pack quantity		1 pcs.	

Electrical connection

Connector: 1 x M12; coding: A



Connection

