AC Current transducer AP-B10

I_{PN} = 10 .. 400 A

Split-core transducer for the electronic measurement AC sinusoidal waveform currents, with galvanic isolation between the primary circuit (high power) and the secondary circuit (electronics). Switch selectable measuring ranges and RMS 0-5V and 0-10V switch selectable voltage output.

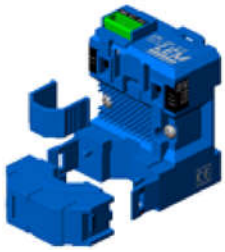

Electrical data

Primary Nominal Current I_{PN} (A.t.rms)	Output Voltage (Analog) V_{OUT} (V DC)	Type	RoHS since date code
10,25,50	0-5 or 0-10	**AP 50 B10**	46320
50,75,100	0-5 or 0-10	**AP 100 B10**	46333
100,150,200	0-5 or 0-10	**AP 200 B10**	47282
200,300,400	0-5 or 0-10	**AP 400 B10**	planned

R_L	Load resistance	≥ 10	kΩ
V_C	Supply voltage	+ 24 ± 5%	V DC
I_C	Current Consumption	< 30	mA
V_{SL}	Output voltage limitation (0-10V)	14	V
V_{SL}	Output voltage limitation (0-5V)	7	V
$\hat{I}_P$	Overload capability	no limitation	

Accuracy-Dynamic performance data

X	Accuracy @ I_{PN}, T_A = 25°C (excluding offset)	< ± 1	% of I_{PN}
ε_L	Linearity error (0 .. ± I_{PN})	< ± 0.5	% of I_{PN}
V_{OE}	Electrical offset voltage @ T_A = 25°C	< ± 0.5	% of I_{PN}
TCV_{OE}	Temperature coefficient of V_{OE}	± 1	mV/K
TCV_{OUT}	Temperature coefficient of V_{OUT} (% of reading)	± 0.1	%/K
t_r	Response time to 90% of I_{PN} step	< 150	m s
BW	Frequency bandwidth (± 1 %)	30 .. 2000	Hz

General data

T_A	Ambient operating temperature	- 20 .. + 60	°C
T_S	Ambient storage temperature	- 20 .. + 85	°C
m	Mass	90	g
IPxx	Protection degree	IP20	

Features

- RMS output (average)
- Split-core type
- 0-5 VDC and 0-10 VDC switch selectable voltage output
- DIN rail or Panel mounting
- Switch selectable measuring ranges
- Isolated plastic case recognized according to UL94-V0.

Advantages

- Large aperture for cable up to Ø18mm
- High isolation between primary and secondary circuits
- Eliminates insertion loss
- Easy installation

Applications

- ***Automation systems***
  Analog current reading for remote monitoring (e.g. motor) and software alarms.
- ***Panel meters***
  Simple connection to power consumption displays.

Application domain

- Energy and Automation

LEM reserves the right to carry out modifications on its transducers, in order to improve them, without prior notice.

Current Transducer AP-B10

Isolation characteristics

V_b	Rated isolation voltage rms [1)]	300	V
	with IEC 61010-1 standards and following conditions :		
	- Reinforced isolation		
	- Over voltage category CAT III		
	- Pollution degree PD2		
	- Heterogeneous field		
V_d	Rms voltage for AC isolation test [2)], 50 Hz, 1min	5	kV
V_e	Partial discharge extinction voltage rms @ 10 pC	1.5	kV
$\hat{V}_w$	Impulse withstand voltage 1.2/50 µs	6.1	kV
dCp	Creepage distance	5.5	mm
dCl	Clearance distance	5.5	mm
CTI	Comparative tracking index (Group I)	600	

Notes : [1)] If insulated cable is used for the primary circuit, the voltage category could be improved according to the insulation characteristics given by the cable manufacturer.

e.g.

Cable insulation (primary)	Category
HAR 05	600V CAT III
HAR 07	1000V CAT III

[2)] Between primary (completely filling the aperture) and secondary.

LEM reserves the right to carry out modifications on its transducers, in order to improve them, without prior notice.

Current Transducer AP-B10

Safety and warning notes

In order to guarantee safe operation of the transducer and to be able to make proper use of all features and functions, please read these instructions thoroughly!
Safe operation can only be guaranteed if the transducer is used for the purpose it has been designed for and within the limits of the technical specifications.
Ensure you get up-to-date technical information that can be found in the latest associated datasheet under www.lem.com.



Caution! Risk of danger

Ignoring the warnings can lead to serious injury and/or cause damage!
The electric measuring transducer may only be installed and put into operation by qualified personnel that have received an appropriate training.
The corresponding national regulations shall be observed during installation and operation of the transducer and any electrical conductor.
The transducer shall be used in electric/electronic equipment with respect to applicable standards and safety requirements and in accordance with all the related systems and components manufacturers' operating instructions.



Caution! Risk of electrical shock

When operating the transducer, certain parts of the module may carry hazardous live voltage (e.g. primary conductor, power supply).
The user shall ensure to take all measures necessary to protect against electrical shock.
The transducer is a built-in device containing conducting parts that shall not be accessible after installation. A protective enclosure or additional insulation barrier may be necessary.
The transducer shall not be put into operation if the jaw opening is open (split core version) or the installation is not completed.
Installation and maintenance shall be done with the main power supply disconnected except if there are no hazardous live parts in or in close proximity to the system and if the applicable national regulations are fully observed.

Safe and trouble-free operation of this transducer can only be guaranteed if transport, storage and installation are carried out correctly and operation and maintenance are carried out with care.

Dimensions AP(R)-B10 (unit : mm, 1mm = 0.0394 inch)

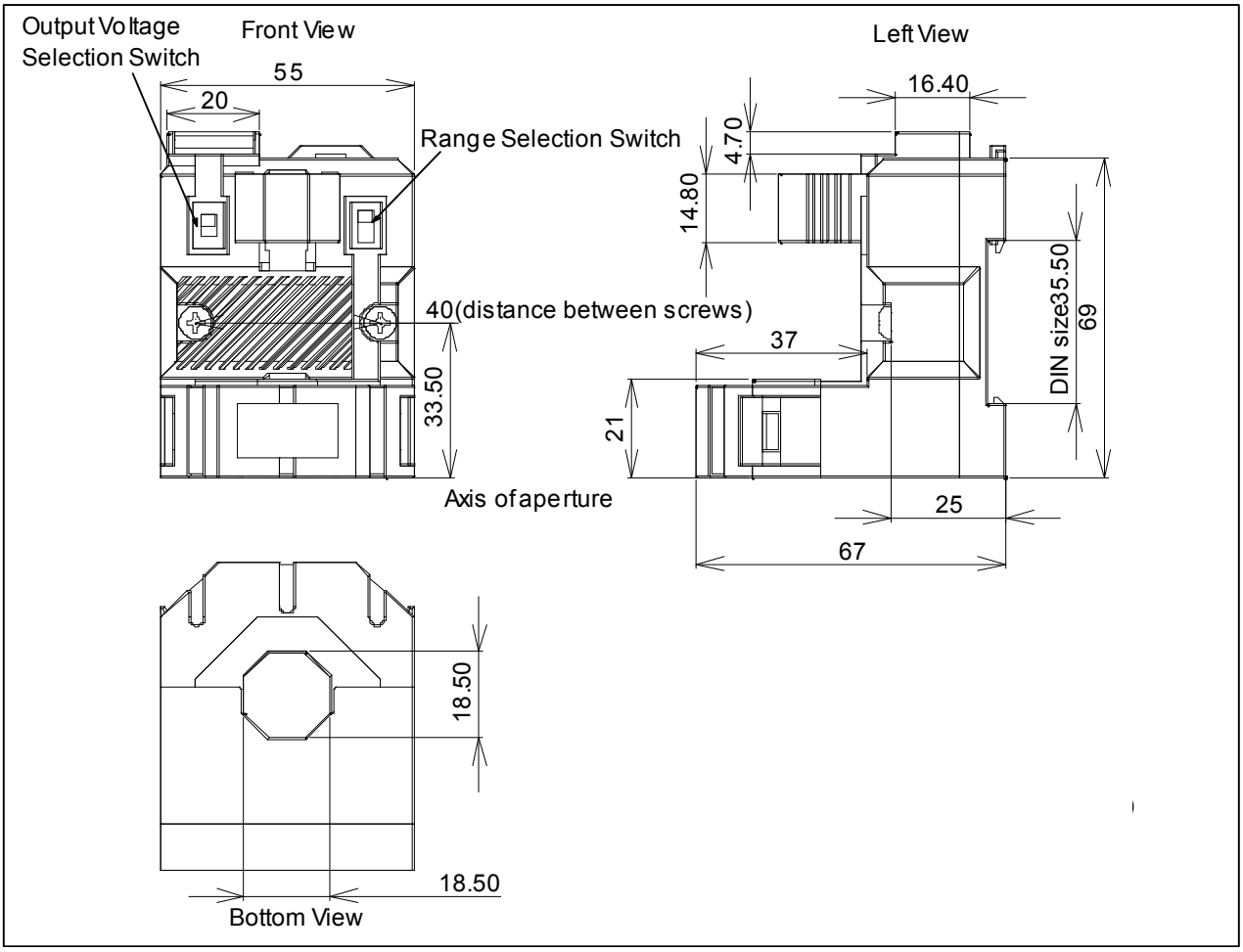

0-5, 10V Selectable

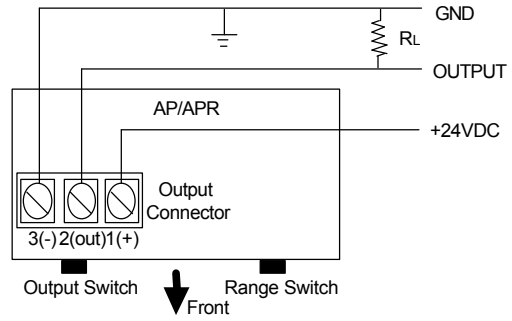

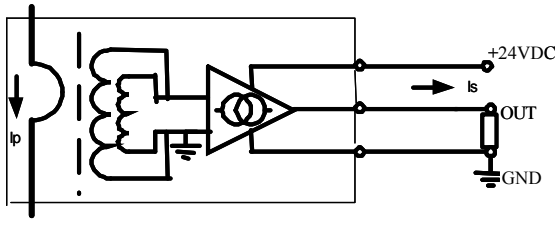

Connections

- Wires up to ∅ 2 mm
- Female connector provided (spring terminal blocks)
- User-friendly spring-cage connection for no-tool direct conductor connection

Mechanical characteristics

• General tolerance	± 1 mm
• Primary aperture	∅ 18.5 mm
• Panel mounting	2 holes ∅ 4.0 mm
• Distance between holes	40.0 mm

For panel mounting, replace M4 screws by new one (not supplied) with appropriate length to panel´s thickness.

LEM reserves the right to carry out modifications on its transducers, in order to improve them, without prior notice.