II5448

Inductive sensor

IIA3010-APKG/US-100-DPO

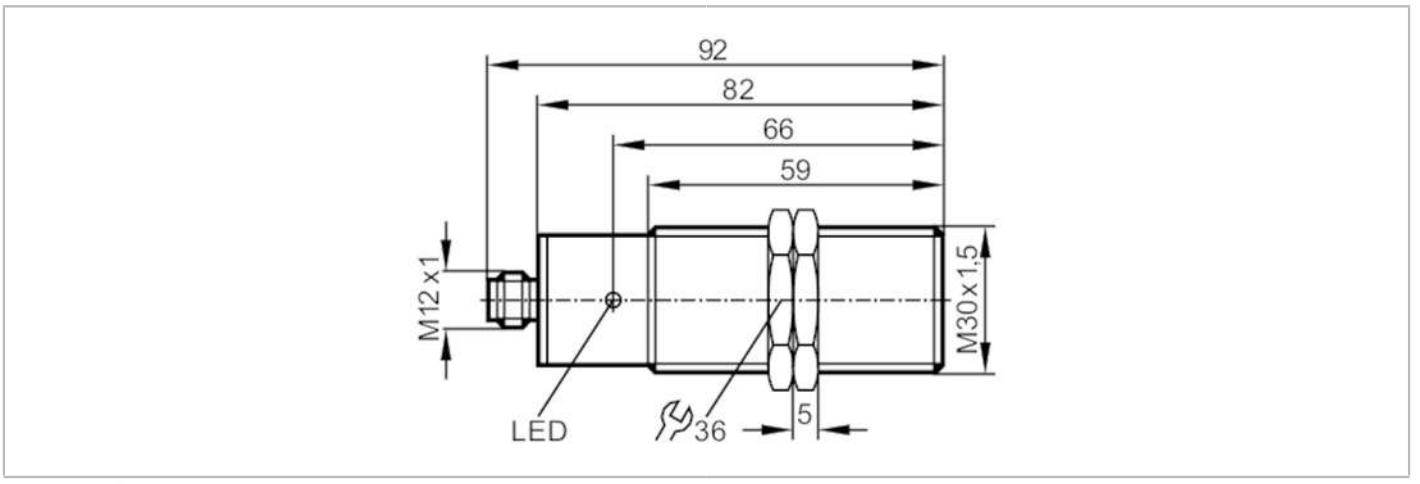

Product characteristics		
Electrical design		PNP
Output function		normally closed
Sensing range	[mm]	10
Housing		threaded type
Dimensions	[mm]	M30 x 1.5 / L = 92
Electrical data		
Operating voltage	[V]	10...36 DC
Current consumption	[mA]	15; (24 V)
Protection class		II
Reverse polarity protection		yes
Outputs		
Electrical design		PNP
Output function		normally closed
Max. voltage drop switching output DC	[V]	2.5
Permanent current rating of switching output DC	[mA]	250
Switching frequency DC	[Hz]	250
Short-circuit protection		yes
Type of short-circuit protection		pulsed
Overload protection		yes
Detection zone		
Sensing range	[mm]	10
Real sensing range Sr	[mm]	10 ± 10 %
Operating distance	[mm]	0...8.1
Accuracy / deviations		
Correction factor		steel: 1 / stainless steel: 0.7 / brass: 0.4 / aluminium: 0.3 / copper: 0.2
Hysteresis	[% of Sr]	1...15

II5448

Inductive sensor

IIA3010-APKG/US-100-DPO

Switch point drift	[% of Sr]	-10...10	
Operating conditions			
Ambient temperature	[°C]	-25...80	
Protection		IP 67	
Tests / approvals			
EMC		EN 60947-5-2	
		EN 55011	class B
MTTF	[years]	1844	
UL approval		Ta	-25...80 °C
		Enclosure type	Type 1
		power supply	Class 2
		File number UL	E174191
Mechanical data			
Weight	[g]	165	
Housing		threaded type	
Mounting		flush mountable	
Dimensions	[mm]	M30 x 1.5 / L = 92	
Thread designation		M30 x 1.5	
Materials		brass nickel-plated; sensing face: PBT	
Displays / operating elements			
Display		switching status	1 x LED, yellow
Accessories			
Items supplied		lock nuts: 2	
Remarks			
Pack quantity		1 pcs.	
Electrical connection - plug			

Connector: 1 x M12; coding: A



II5448

Inductive sensor

IIA3010-APKG/US-100-DPO

Connection

