LMT102

Sensor for point level detection

LMCCE-A12E-QSKG-2/US

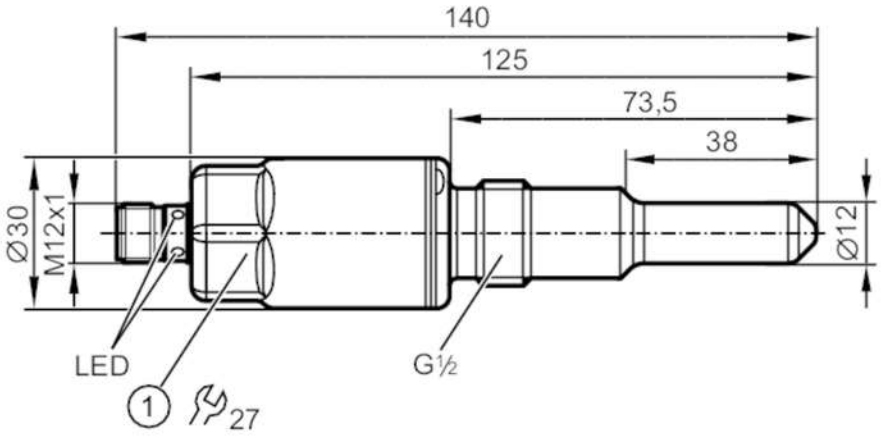

1 Tightening torque 20...25 Nm

Product characteristics		
Number of inputs and outputs		Number of digital outputs: 2
Factory setting		hydrous media
Process connection		threaded connection G 1/2 sealing cone
Application		
Special feature		Gold-plated contacts
Media		Liquids; viscous media; powder
Recommended media		water; hydrous media; oils; oil-based media; powder
Cannot be used for		See the operating instructions, chapter "Function and features".
Probe length	[mm]	38
Tank pressure	[bar]	-1...40; (MAWP (for applications according to CRN): 40 bar / 4 MPa)
Oil		
Medium temperature	[°C]	-20...100
Medium temperature short time	[°C]	-20...150; (1 h)
Water		
Medium temperature	[°C]	-20...100
Medium temperature short time	[°C]	-20...150; (1 h)
Electrical data		
Operating voltage	[V]	18...30 DC
Current consumption	[mA]	< 50
Protection class		III
Reverse polarity protection		yes
Measuring principle		capacitive
Inputs / outputs		
Number of inputs and outputs		Number of digital outputs: 2

LMT102

Sensor for point level detection

LMCCE-A12E-QSKG-2/US

Outputs			
Total number of outputs		2	
Output signal		switching signal; IO-Link	
Electrical design		PNP/NPN	
Number of digital outputs		2	
Output function		normally open / normally closed; (parameterisable)	
Max. voltage drop switching output DC	[V]	2.5	
Permanent current rating of switching output DC	[mA]	100	
Short-circuit protection		yes	
Type of short-circuit protection		pulsed	
Overload protection		yes	
Measuring/setting range			
Factory setting		hydrous media	
Response times			
Response time	[s]	< 0.5	
Interfaces			
Communication interface		IO-Link	
Transmission type		COM2 (38,4 kBaud)	
IO-Link revision		1.1	
SDCI standard		IEC 61131-9	
Profiles		Smart Sensor: Process Data Variable; Device Identification	
SIO mode		yes	
Required master port type		A	
Process data analogue		1	
Process data binary		2	
Min. process cycle time	[ms]	2.3	
Supported DeviceIDs		Type of operation	DeviceID
		Default	370
Operating conditions			
Ambient temperature	[°C]	-20...85	
Note on ambient temperature		Medium temperature: < 100 °C	
		-20...60 °C	
		Medium temperature: < 150 °C	
Storage temperature	[°C]	-40...85	
Protection		IP 68; IP 69K	
Tests / approvals			
EMC		DIN EN 61000-6-2	
		DIN EN 61000-6-4	: open tanks
		DIN EN 61000-6-3	: closed tanks
Shock resistance		DIN EN 60068-2-27	50 g (11 ms)
Vibration resistance		DIN EN 60068-2-6	20 g (10...2000 Hz)
MTTF	[years]	223	

LMT102

Sensor for point level detection

LMCCE-A12E-QSKG-2/US

UL approval		UL Approval no.	H001
Mechanical data			
Weight	[g]	240	
Dimensions	[mm]	Ø 30 / L = 125	
Materials		stainless steel (1.4404 / 316L); PEEK; PEI; FKM	
Materials (wetted parts)		PEEK; surface characteristics: Ra < 0,8 / Rz 4	
Process connection		threaded connection G 1/2 sealing cone	
Displays / operating elements			
Display		switching status	LED, yellow
		operating status	LED, green
Remarks			
Pack quantity		1 pcs.	

Electrical connection

Connector: 1 x M12; coding: A; Contacts: gold-plated



Connection

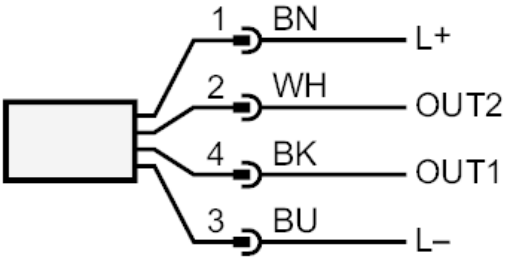

OUT1:	switching output IO-Link Teach
OUT2:	switching output
	colours to DIN EN 60947-5-2
	Core colours :
BK =	black
BN =	brown
BU =	blue
WH =	white