Kraus & Naimer



Sample image

Datasheet

Article number: 70072211
Designation: KG10A.T103/GBA010.FT2
Description: Switch

IEC 60947-3 EN 60947-3, VDE 0660 Teil 107

Rated insulation voltage Ui

Voltage (V)	AC / DC
690	AC

Rated uninterrupted current Iu/Ith

Current (A)	Ambient temperature (°C)	Peak temperature (°C)	additional requirements
20	50	55	Ambient temperature +50°C during 24 hours with peaks up to +55°C

Rated operational current Ie

Utilization category	Voltage (V)	Current (A)
AC-15	220 - 240	6
AC-15	380 - 440	4

Rated operational power

Utilization category	Voltage (V)	No. of phases	No. of poles	Power (kW)
AC-3	220 - 240	3	3	2,20
AC-3	380 - 440	3	3	3,70
AC-3	660 - 690	3	3	3,70
AC-3	220 - 240	1	2	1,10
AC-3	380 - 440	1	2	1,50
AC-23A	220 - 240	3	3	3
AC-23A	380 - 440	3	3	5,50
AC-23A	660 - 690	3	3	5,50
AC-23A	220 - 240	1	2	1,50
AC-23A	380 - 440	1	2	2,20

Max. Fuse rating IEC

Fuse characteristic	No. of Fuses	Current (A)
gG	1	20

UL60947-4-1 , UL508

Nominal Voltage

Voltage (V)	AC / DC
300	AC

Rated insulation voltage Ui

Voltage (V)	AC / DC
300	AC

Rated thermal current

Current (A)	Ambient temperature (°C)	Additional Text
20	0 - 40	--

Horsepower rating

Across-the-Line Motor Starting	Voltage (V)	No. of phases	No. of poles	Power (HP)	Ambient temperature [°C]
DOL	110 - 220	1	2	0,50	40
DOL	220 - 240	1	2	1	40
DOL	277 - 277	1	2	1	40
DOL	110 - 120	3	3	1	40
DOL	220 - 240	3	3	2	40

Pilot duty rating code

Duty Code
A300

SCCR / Max. fuse rating

Conditions of acceptability
These devices are suitable for use on circuits capable of delivering not more than 5kA rms symmetrical amperes, 300V ac max. when protected by Class J fuses.

Temp. rating of wire

Temperature rating (°C)	Current (A)	Text
60 - 75	--	Use copper wire only

Connecting instructions

Markings
Break all lines.
For use on a flat surface of a type 1 enclosure.

General Use

AC / DC	Voltage (V)	Current (A)	No. of phases	No. of poles	No. of contacts in series
AC	277	20	1	1	1
AC	300	20	1	2	1

Kraus & Naimer

General Use

AC / DC	Voltage (V)	Current (A)	No. of phases	No. of poles	No. of contacts in series
AC	300	20	1	2	1
AC	300	20	3	3	1

General Information

Text

- The operating handle and position indicating means to be used with these manual motor controllers should be provided from the manufacturer, or the operating handle and position indicating means to be used should have been previously evaluated in combination with the manual motor controllers.
- When intended for use as a motor disconnector the device shall be provided with a method of being locked in the OFF-position.

CSA

Nominal Voltage

Voltage (V)	AC / DC
300	AC

Rated insulation voltage Ui

Voltage (V)	AC / DC
300	AC

Rated thermal current

Current (A)	Ambient temperature (°C)	Additional Text
20	0 - 40	--

Horsepower rating

Across-the-Line Motor Starting	Voltage (V)	No. of phases	No. of poles	Power (HP)	Ambient temperature [°C]
DOL	110 - 220	1	2	0,50	40
DOL	220 - 240	1	2	1	40
DOL	277 - 277	1	2	1	40
DOL	110 - 120	3	3	1	40
DOL	220 - 240	3	3	2	40

Pilot duty rating code

Duty Code
A300

Temp. rating of wire

Temperature rating (°C)	Current (A)	Text
75	--	--

General Use

AC / DC	Voltage (V)	Current (A)	No. of phases	No. of poles	No. of contacts in series
AC	277	20	1	1	1
AC	277	20	3	3	1

GENERAL TECHNICAL INFORMATION

Size of conductor

composition of conductor	Min. / Max. value	No. of conductor per terminal	Cross section (mm²) or (AWG/kcmil)	Material of the wire
Solid wire	Min.	1	0.5mm²	Copper
Solid wire	Min.	2	0.5mm²	Copper
Flexible wire	Min.	1	0.75mm²	Copper
Flexible wire	Min.	2	0.75mm²	Copper
Flexible wire	Max.	1	AWG 12	Copper
Flexible wire	Max.	1	2.5mm²	Copper
Single-core or stranded wire	Max.	1	AWG 12	Copper
Single-core or stranded wire	Max.	1	2.5mm²	Copper
Flexible wire with ferrule according to DIN 46228	Max.	1	2.5mm²	Copper
Flexible wire with ferrule according to DIN 46228	Min.	1	0.5mm²	Copper
Flexible wire with ferrule according to DIN 46228	Min.	2	0.5mm²	Copper

Stripping length

Length (mm)	--



Recommended screw driver

Type of screw driver	Value
Cross Screwdriver	PH1
Slot screwdriver according to DIN 5264	0,8x4

Tightening torque of screws

tightening torque (Nm)	tightening torque (lb-in)
0,60	5

Approbations

Specification	Marking
EAC	
CE marking	
UK Directives	
UL 60947-4-1; CSA C22.2 No. 60947-4-1	
CSA C.22.2 No.14	

Approbations	
Specification	*Marking*
GB/T14048.3	

General Information

Text

- Use only copper wires with or without tinned/silver-plated individual wires. Soldering the end of the wire before wiring is not allowed.
- Terminals with factory fitted jumper links are tightened during production for loss prevention. When opening the terminal clamps, make sure that no factory fitted links get lost and that all wire connections are properly seated.
- After wiring, ALL terminal screws must be tightened to the specified torque values.
- The protection class of the selected mounting type may vary if optional extras are used.
- Do not lubricate or treat contacts.
- Switches may only be mounted, connected and set into operation by qualified persons according to the accepted rules of technology.
- After installation of the switches the spacings between the terminals must be sufficient to fulfill the requirement of the applicable standards.

Waste Electrical & Electronic Equipment (WEEE)

Picture name	*Description*
	Do not throw in the trash as care must be taken to ensure environmentally sound disposal and recycling. Please either use an environmentally friendly waste disposal company; return to the supplier for disposal; or return direct to the manufacturer, Kraus & Naimer. You can find local Kraus & Naimer offices at www.krausnaimer.com

Proposition 65

Picture name	*Description*
	WARNING: This product can expose you to chemicals including nickel and lead, which is known to the State of California to cause cancer. For more information go to www.P65Warnings.ca.gov.

Classification Contact: Rigid contact bridge
Classification Contact Mat: Silver
Classification Terminal: Screw terminal

Mounting-FT2

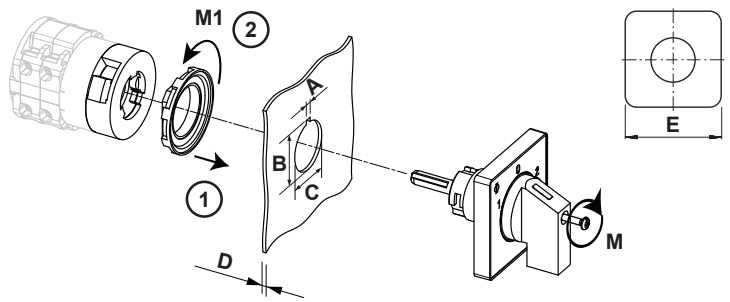

IP - Code front side		IP66, IP67, IP69k
Stages		1,00 - 12,00
A	⊢	3,20 mm
A+_tol.	⊢	0,20 mm
A-_tol.	⊢	0,00 mm
B	⊢	24,10 mm
B+_tol.	⊢	0,40 mm
B-_tol.	⊢	0,00 mm
C	⌀	22,30 mm
C+_tol.	⌀	0,40 mm
C-_tol.	⌀	0,00 mm
D	⊢	<= 6,00 mm
E	□	48,00 mm
M	⍬	0,50 Nm
M1	⍬	1,80 Nm

Kraus & Naimer

Switch program

KG10A.T303.FT2

Kraus & Naimer

KG10A	T303E	E	Page 1 of 1

Face Plate

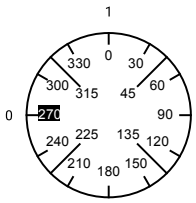

Switching Angle: 90
Total switching Angle: 90

		T3	T1		T2								
		1	3	5	7	9	11	13	15	17	19	21	23
		Marking plate:S0D H043 51A											
		2	4	6	8	10	12	14	16	18	20	22	24
		L3	L1		L2								
0	270												
	285												
	300												
	315												
	330												
	345												
1	0	■	■		■								
	15												
	30												
	45												
	60												
	75												
	90												
	105												
	120												
	135												
	150												
	165												
	180												
	195												
	210												
	225												
	240												
	255												

Version: 2

Jumpers

1 ●	● 3	4 ●	● 2
5 ○	● 7	8 ●	○ 6
9 ○	○ 11	12 ○	○ 10
13 ○	○ 15	16 ○	○ 14
17 ○	○ 19	20 ○	○ 18
21 ○	○ 23	24 ○	○ 22
25 ○	○ 27	28 ○	○ 26
29 ○	○ 31	32 ○	○ 30
33 ○	○ 35	36 ○	○ 34
37 ○	○ 39	40 ○	○ 38
41 ○	○ 43	44 ○	○ 42
45 ○	○ 47	48 ○	○ 46

Kraus & Naimer

Face plate

S0.F456/A10.E1L

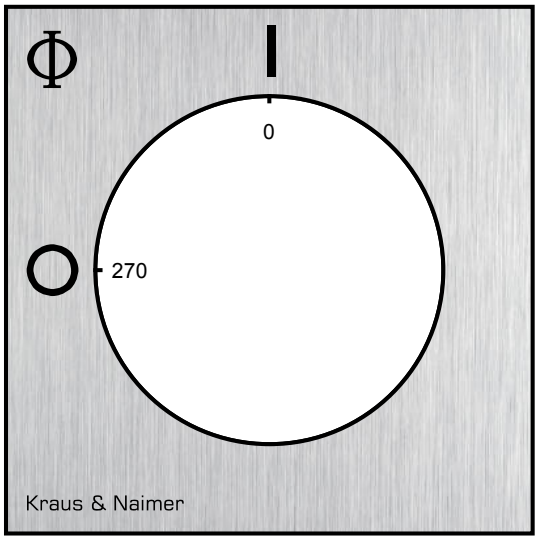



Sample image

PADLOCK DEVICE

with type F-handle (locking direction at right angle to the shaft) for type of mounting FT, *FT1, *FT2 und *FT6

Designation: S0.V840A/A1B1-FT2
Lock bow diameter: "A" for lock bow diameter 4,5-5,0mm
Color of handle: "1" black, locking bar flag red
Locking program: "B" 270°, knockouts every 90°
Color of face plate frame: "1" black
Type of mounting: "-FT2" for type of mounting *FT2/*FT2-V

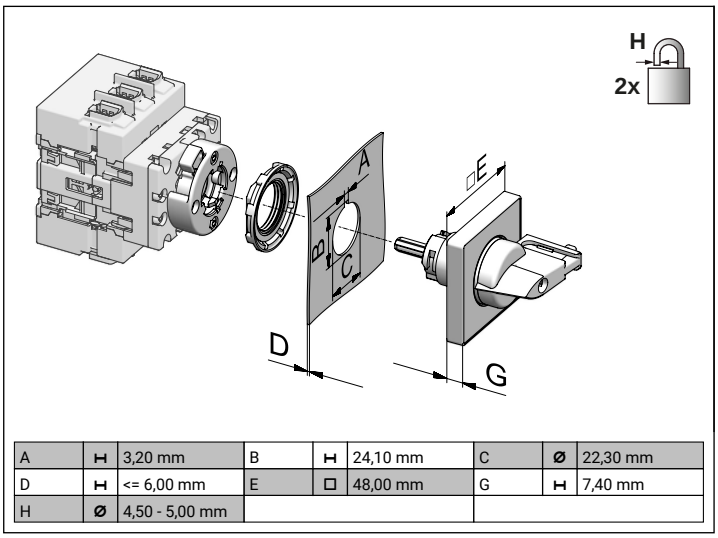

A	⊢	3,20 mm	B	⊢	24,10 mm	C	⌀	22,30 mm
D	⊢	<= 6,00 mm	E	□	48,00 mm	G	⊢	7,40 mm
H	⌀	4,50 - 5,00 mm						