Product Data Sheet 8412 NGHAR-183

ebmpapst

The engineer's choice



GREEN TECH

8412 NGHAR-183

INDEX

1 General 3

2 Mechanics 3

2.1 General 3
2.2 Connections 3

3 Operating Data 4

3.1 Electrical Interface - Input 4
3.2 Electrical Operating Data 5
3.3 Electrical Features 5
3.4 Aerodynamics 7
3.5 Sound Data 9

4 Environment 9

4.1 General 9
4.2 Climatic Requirements 9

5 Safety 10

5.1 Electrical Safety 10
5.2 Approval Tests 10

6 Reliability 10

6.1 General 10

1 General

Fan type	Fan	
Rotating direction looking at rotor	Counterclockwise	
Airflow direction	Air outlet over struts	
Bearing system	Sleeve bearing	
Mounting position - shaft	Any	

2 Mechanics

2.1 General

Width	80,0 mm	
Height	80,0 mm	
Depth	25,4 mm	
Mass	0,095 kg	
Housing material	Plastic	
Impeller material	Plastic	
Max. torque when mounted across both mounting flanges Screw size	Wire outlet corner: 50 Ncm Remaining corners: 70 Ncm ISO 4762 - M4 degreased, without an additional brace and without washer	

2.2 Connections

Electrical connection	Wires	
Lead wire length Tolerance	L = 290 mm +- 10,0 mm	
Wire size (AWG)	24	
Insulation diameter	1,55 mm	

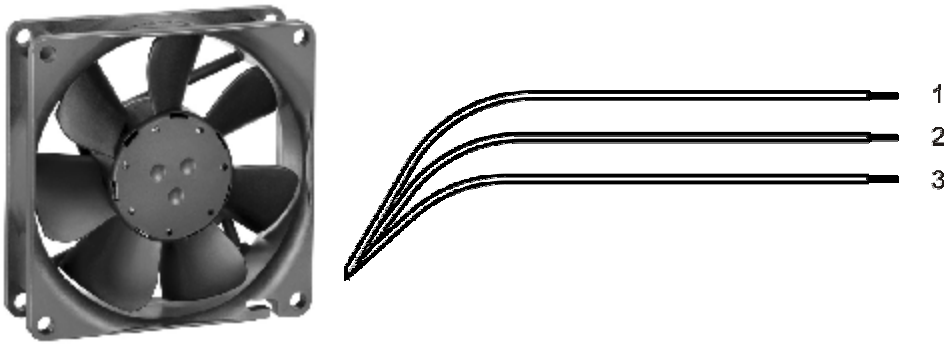

Wire	Color	Operation
1	red	+ UB
2	blue	- GND
3	violet	CONTR

3 Operating Data

3.1 Electrical Interface - Input

Control input	Analog

Features

Input voltage range		0 V - 10 V

Characteristics

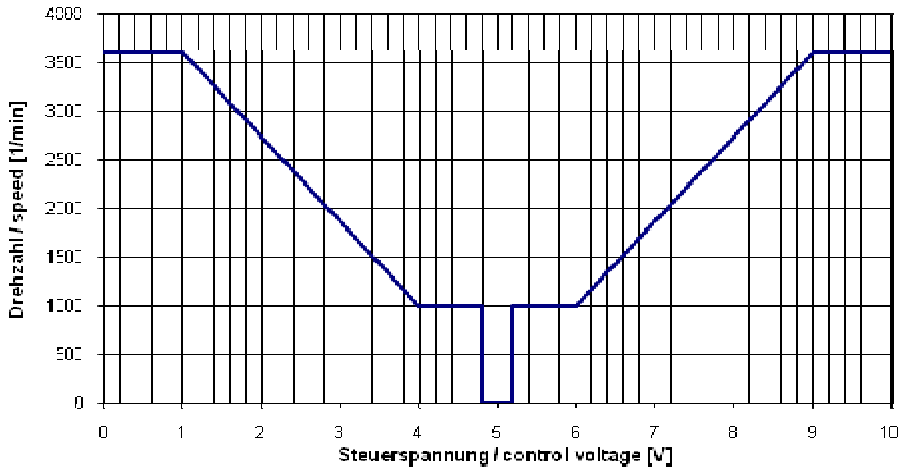

Schematics

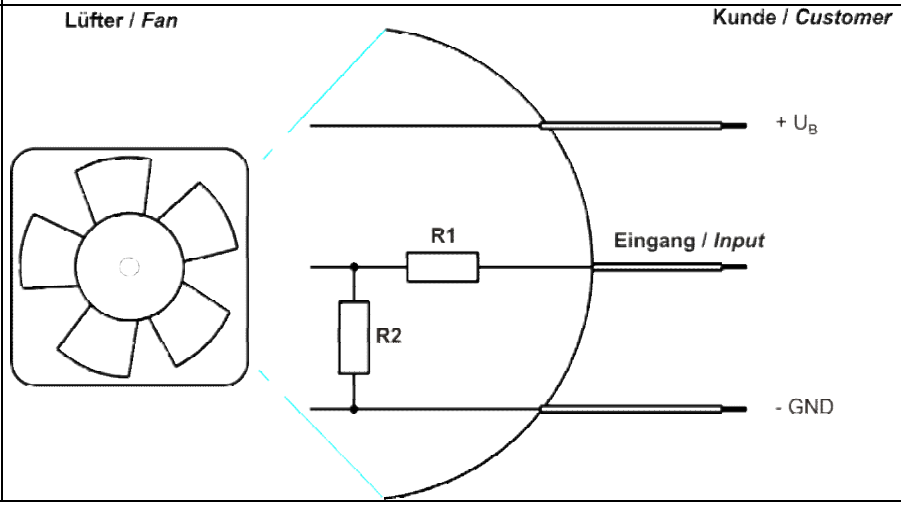

Note to the speed control / direction of rotation

On the control voltage input
from 4,4 ... 4,8 V and 5,2 ... 5,6 V undefined value range.
From 5.6 V reversing operation.

3.2 Electrical Operating Data

Measurement conditions: Normal air density = 1,2 kg/m3; Temperature 23°C +/- 3°C; Motor axis horizontal; warm-up time before measuring 5 minutes (unless otherwise specified). In the intake and outlet area should not be any solid obstruction within 0,5 m.

Δp = 0: corresp. to free air flow (see chapter aerodynamics)
I: corresp. to arithm. mean current value

Name	Condition		
U Contr. 0001	U Contr.: 0,7 V		

Data are valid for resversed operation!

Features	Condition	Symbol	Values		
Voltage range		U	10,5 V		13,2 V
Nominal voltage		U_N		12,0 V	
Power consumption Tolerance	Δp = 0 U Contr. 0010	P	2,2 W +- 17,5 %	2,8 W +- 25,0 %	2,8 W +- 25,0 %
Current consumption Tolerance	Δp = 0 U Contr. 0010	I	205 mA +- 17,5 %	230 mA +- 25,0 %	215 mA +- 25,0 %
Speed Tolerance	Δp = 0 U Contr. 0010	n	3.340 1/min +- 12,5 %	3.600 1/min +- 9,0 %	3.600 1/min +- 9,0 %
Starting current consumption				600 mA	

3.3 Electrical Features

Electronic function	Speed-Controlled	
Reversed polarity protection Max. residual current at U_N	Rectifying diode I_F <= 100 uA	
Locked rotor protection	Auto restart	
Locked rotor current at U_N	I_{block} approx. 440 mA	
Clock signal at locked rotor	t_3 / t_4 typical: 0,6 s / 10 s	

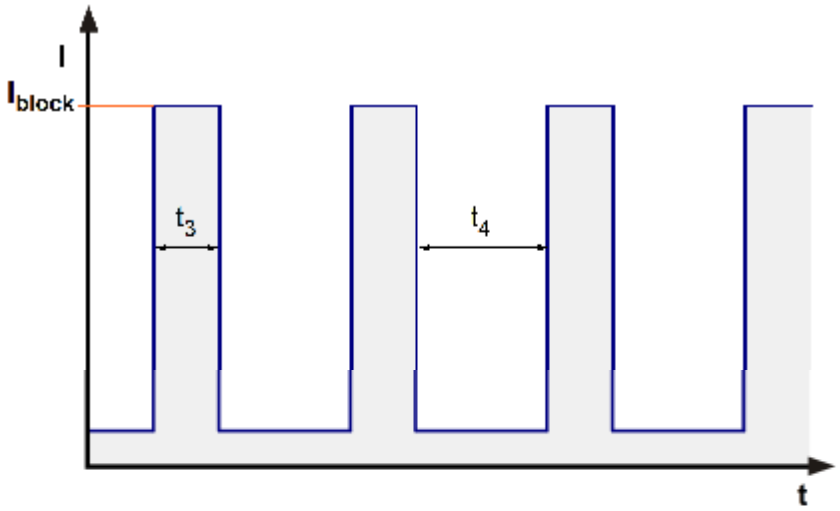
I
I block
t3
t4
t

3.4 Aerodynamics

Measurement conditions:	Measured with a double chamber intake rig acc. to DIN EN ISO 5801. Normal air density = 1,2 kg/m3; Temperature 23°C +/- 3°C; In the intake and outlet area should not be any solid obstruction within 0,5 m. Motor shaft horizontal. The information is only valid under the specified test conditions and may be changed by the installation conditions. If there are deviations from the standard test conditions, the characteristic values must be checked under the installed conditions.

a.) Operation condition:

3.600 1/min at free air flow	U Contr. 0,7 V		

Max. free-air flow (Δp = 0 / $\dot{V}$ = max.)	74 m3/h	
Max. static pressure (Δp = max. / $\dot{V}$ =0)	62 Pa	

Rotation in normal direction.

b.) Operation condition:

at free air flow	

Max. free-air flow (Δp = 0 / $\dot{V}$ = max.)	59 m3/h	
Max. static pressure(Δp = max. / $\dot{V}$ =0)	55 Pa	

Counter rotation.
n: 3.600 1/min

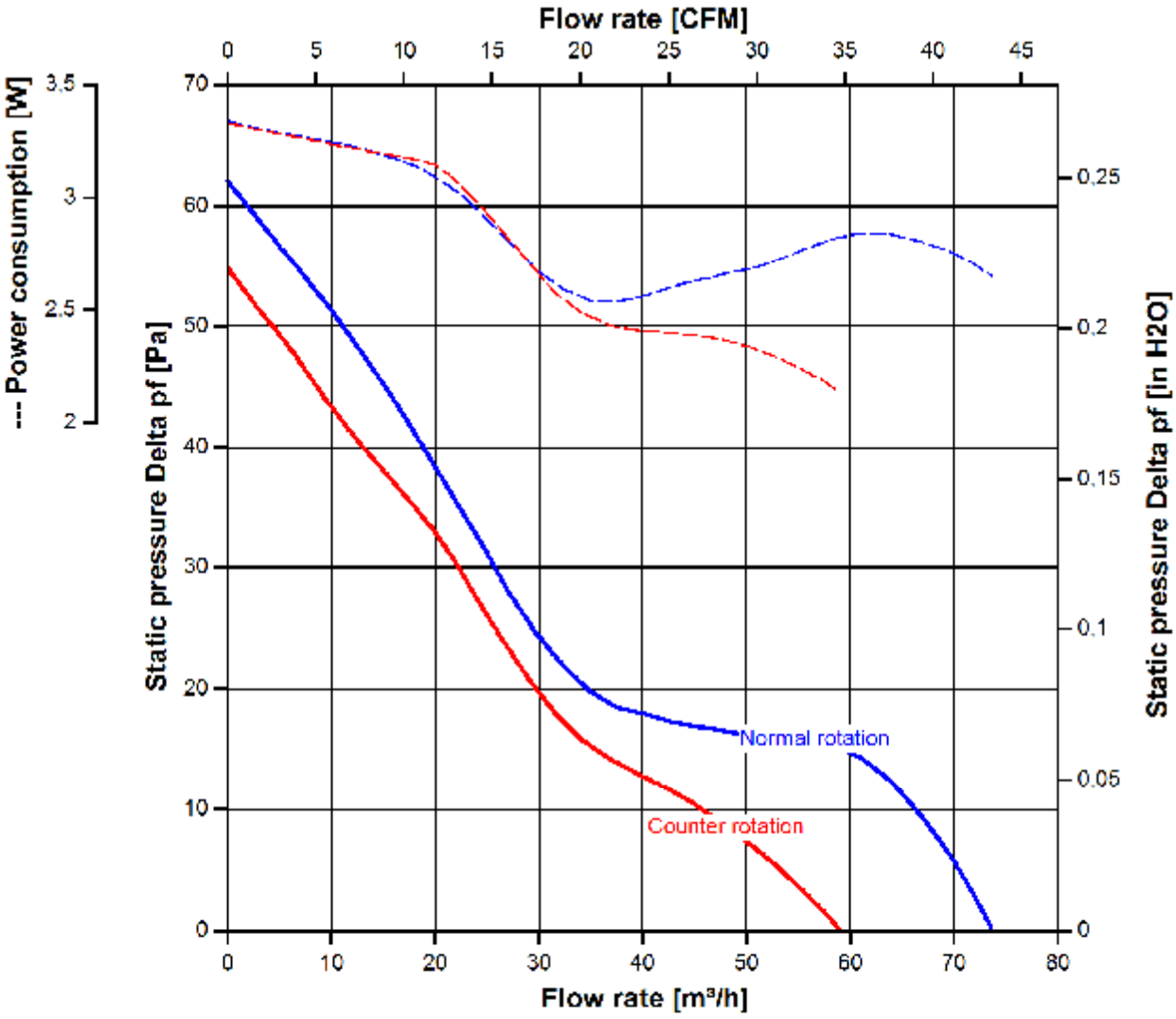
Flow rate [CFM]
0
5
10
15
20
25
30
35
40
45
--- Power consumption [W]
3,5
3
2,5
2
Static pressure Delta pf [Pa]
70
60
50
40
30
20
10
0
Static pressure Delta pf [in H2O]
0,25
0,2
0,15
0,1
0,05
0
Normal rotation
Counter rotation
0
10
20
30
40
50
60
70
80
Flow rate [m³/h]

3.5 Sound Data

Measurement conditions:	Sound pressure level: 1 meter distance between microphone and the air intake. Measured in a semianchoic chamber with a background noise level of Lp(A) < 5 dB(A) For further measurement conditions see chapter aerodynamics.

a.) Operation condition:

3.600 1/min at free air flow	U Contr. 0,7 V		

b.) Operation condition:

at free air flow	

4 Environment

4.1 General

Min. permitted ambient temperature TU min.	-10 °C	
Max. permitted ambient temperature TU max.	70 °C	
Min. permitted storage temperature TL min.	-40 °C	
Max. permitted storage temperature TL max.	80 °C	

4.2 Climatic Requirements

Humidity requirements	humid heat, cyclic; according to DIN EN 60068-2-30, 6 cycle	
Water exposure	None	
Dust requirements	Dust check; according to DIN EN 60068-2-68, 6g/m2d, 1 day	
Salt fog requirements	None	

Permitted application area:
The product is for the use in sheltered rooms with limited controlled temperature. Occasionally condensed water is allowed. Direct exposure to water must be avoided. Saline ambient conditions must be avoided.

Pollution degree 2 (according DIN EN 60664-1)
It occurs only non-conductive pollution. Occassionally, temporary conductivity caused by condensation occurs.

Please require severity levels and specification parameters from the responsible development departments.

5 Safety

5.1 Electrical Safety

Dielectric strength DIN EN 60950 (VDE 0805) and DIN EN 60335 (VDE 0700) A.) Type test Measuring conditions: After 48h of storage at 95% R.H. and 25°C. No arcing or breakdown is allowed! All connections together to ground. B.) Routine test Measuring conditions: At indoor climate. No arcing or breakdown is allowed! All connections together to ground.	Not applicable Not applicable	
Isolation resistance Measuring conditions: After 48h of storage at 95% R.H. and 25°C measured with U=500 VDC for 1 min.	RI > 10 MOhm	
Clearance / creepage distance	1,0 mm / 1,2 mm	
Protection class	III	

5.2 Approval Tests

CE	EC Declaration of Conformity	Yes
EAC	Eurasian Conformity	Yes
UL	Underwriters Laboratories	Yes / UL507, Electric Fans
VDE	Association for Electrical, Electronic and Information Technologies	Yes / Approval acc. to EN 60950 (VDE 0805) - Information technology equipment
CSA	Canadian Standards Association	Yes / C22.2 No. 113 Fans and Ventilators
CCC	China Compulsory Certification	Not applicable

6 Reliability

6.1 General

Life expectancy L10 at TU = 40 °C	70.000 h	
Life expectancy L10 at TU max.	35.000 h	
Life expectancy L10 acc. to IPC 9591 at TU = 40 °C	117.500 h	

Copying of this document, and giving it to others and the use or communication of the contents thereof, are forbidden without express authority. Offenders are liable to the payment of damages. All rights are reserved in the event of the grant of a patent or the registration of a utility model or design.

Schutzvermerk nach DIN ISO 16016 beachten/
Refer to protection notice DIN ISO 16016!

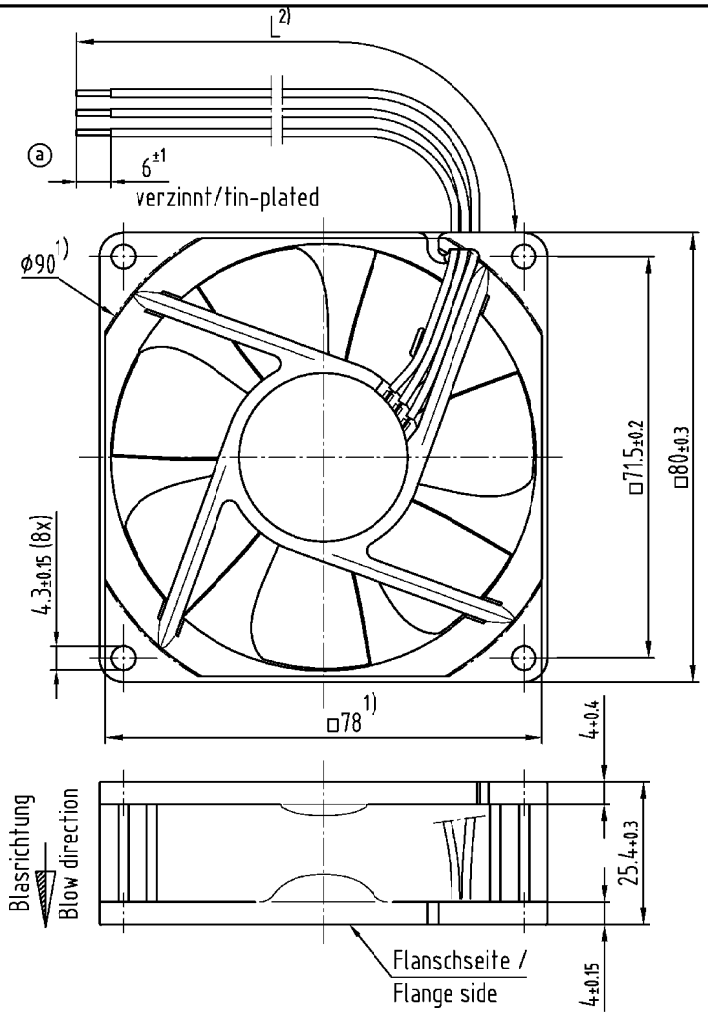

1) = Maße für Montageausschnitt / Dimensions for assembly wall.
2) = Länge der Litzen siehe Produktspezifikation Bl. 3 /
Length of wires see product specification page 3.

- Axialspiel bei Kugellagerung (K): 0 (mit Federausgleich) /
  Axial clearance by ball bearing (K): 0 (by preload spring)
- Axialspiel bei Gleitlagerung (G): 0.1 - 0.9/
  Axial clearance by sleeve bearing (G): 0.1 - 0.9

			ebmpapst	Werkstoff/Material:	Volumen/Volume (mm³):
SAP-Status/State	Aend.-Nr./Change-No.	AutoCAD-System-Version	CAD-Umgebung/ CAD-Environment		Gewicht/Mass (g):
		Datum/Date	Name/Name		
Tolerierung/Tolerances:		Bearb./ Drawn		Artikel/Title	
		Gepr./ Checked			
Allgemeintoleranzen/Gen. tolerances:		Freig./ Releas.			
		ebmpapst		Zchg.-Nr./ Drawing.-No.:	Ers.f.Zchg./ Replaces:
		ebm-papst St. Georgen GmbH & Co. KG		Dokumenttyp/Type of Document / Teildokument (Blatt/Page) / Index/Index / Format/Size: / Massstab/scale	

11/09