stay connected

M12 MALE 90° SHIELDED WIREABLE SCREW TERM.

5-pol. max.0,75mm² 4-6mm

Male 90°
M12, 5-pole
shielded
Sealing range (cable Ø): 4…6 mm

Link to Product

Illustration



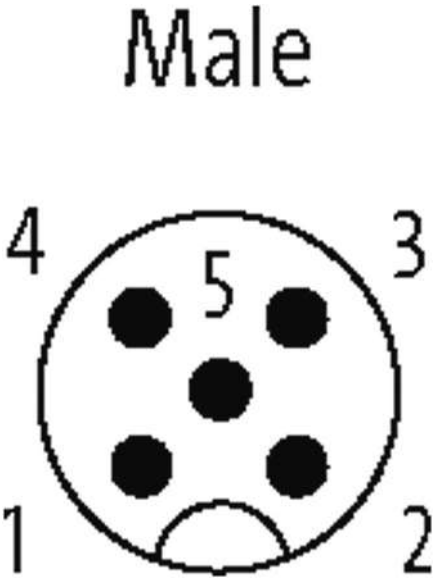

The information in this brochure has been compiled with the utmost care.
Liability for the correctness completeness and topicality of the information is restricted to gross negligence. Version: 06/18

Murrelektronik Ltd. | Pendlebury Industrial Estate, Albion Street, Swinton | Manchester M27 4FG | Fon +44 161 72831-33 | Fax +44 161 72831-30 | shop@murrelektronik.co.uk | shop.murrelektronik.co.uk

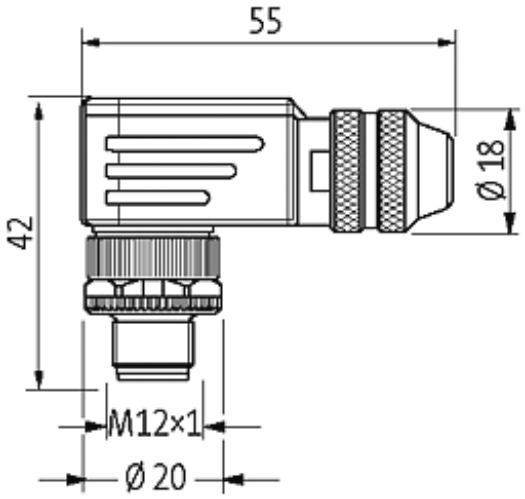

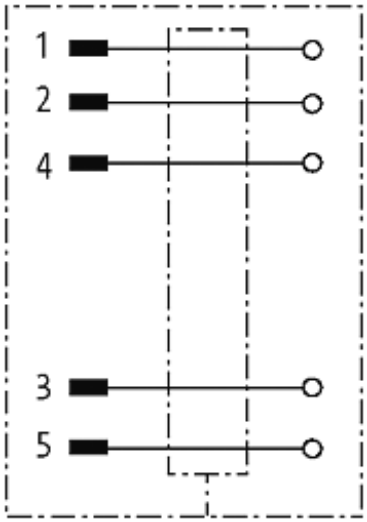

Product may differ from Image

Form	
Form	13341
Technical Data	
Operating voltage	max. 60 V AC/DC
Operating current per contact	max. 4 A
Connection cross section	max. 0.75 mm²
Sealing range (cable Ø)	4...6 mm
Protection	IP67 inserted and tightened (EN 60529)
Housing	Brass, nickel plated
General data	
Temperature range	-40...+85 °C
Commercial data	
country of origin	DE
customs tariff number	85366990
EAN	4048879198820

The information in this brochure has been compiled with the utmost care.
Liability for the correctness completeness and topicality of the information is restricted to gross negligence. Version: 06/18

Murrelektronik Ltd. | Pendlebury Industrial Estate, Albion Street, Swinton | Manchester M27 4FG | Fon +44 161 72831-33 | Fax +44 161 72831-30 | shop@murrelektronik.co.uk | shop.murrelektronik.co.uk

eClass	27279221
Packaging unit	1

The information in this brochure has been compiled with the utmost care.
Liability for the correctness completeness and topicality of the information is restricted to gross negligence. Version: 06/18

Murrelektronik Ltd. | Pendlebury Industrial Estate, Albion Street, Swinton | Manchester M27 4FG | Fon +44 161 72831-33 | Fax +44 161 72831-30 | shop@murrelektronik.co.uk | shop.murrelektronik.co.uk