GENERAL PURPOSE SWITCH E SERIES

General purpose switch E Series

5 button types in different versions and a variety of auxiliary actuators available

- 3 terminal types (optional screw terminals available)
- 3 contact arrangements
- Long-life coil spring mechanism
- High-temperature 150°C and 200°C available on select models (consult factory)

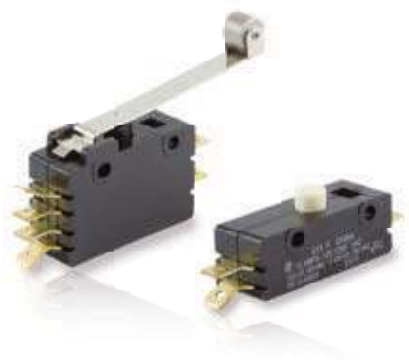

Technical specifications

Series	**E ❶**
Electrical	
Ambient temperature	105°C standard 150°C optional (200°C optional) E13
Flammability rating	UL94HB

Materials

Housing	General purpose phenolic
Actuator	Thermoplastic nylon
Common terminal	Copper Alloy
NO and NC terminals	Copper Alloy (E13, E19, G13, G20) Copper (E14, E20)
Moving blade	Copper Alloy (E13, E19, G13, G20) Copper (E14, E20)
Spring	Stainless steel
Auxiliary actuator	Cold-rolled steel (nickel-plated)
Roller	Sintered stainless steel
Contacts	Gold crosspoint (G13, G20) Silver alloy (E13, E14, E19, E20)

Electrical rating and operating life ❷

Electrical rating according to		Electrical life (operations)		Code
EN 61058-1	**UL 1054**	**to EN**	**to UL**	
Single pole				
–	15 A, 125/250 VAC 3/4HP, 125 VAC 1-1/2HP, 250 VAC 2 A, 48 VDC	–	6,000 (100,000*)	E13
–	25 A, 125/250 VAC 1HP, 125 VAC 2HP, 250 VAC 2 A, 48 VDC	–	6,000	E14
–	0.1 A, 125 VAC 0.1 A, 30 VDC	–	100,000	G13
Double pole				
–	15 A, 125/250 VAC 3/4HP, 1-1/2HP, 250 VAC	–	6,000 (100,000*)	E19
–	20 A, 125/250 VAC 1HP, 125 VAC 2HP, 250 VAC	–	6,000	E20
–	0.1 A, 125 VAC	–	100,000	G20

* Upon request

Mount point ❸

Type	Code
Standard ratio actuator or button	0
High ratio actuator	5

Circuitry ❹

Type	Code
Double throw	0
Normally open	1
Normally closed	2

Actuator ❺

Type	Code
Button	A E (only for E13)
Lever	H
Button with ferrule	J
Roller	K
Button with extra over-travel and ferrule	M

Single pole version

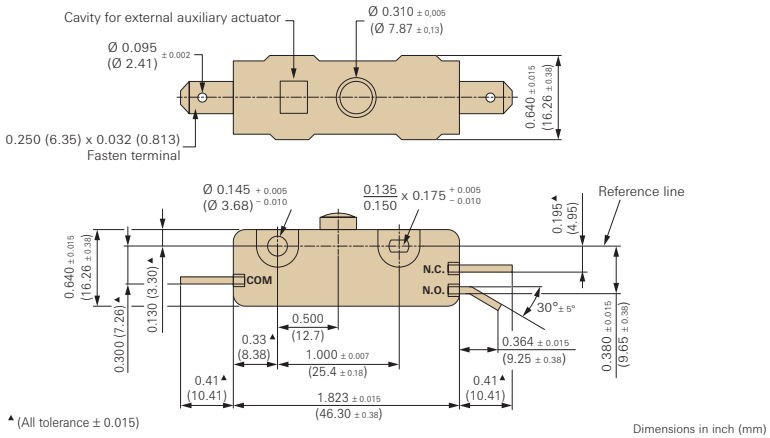

▲ (All tolerance ± 0.015)

Dimensions in inch (mm)

Double pole version

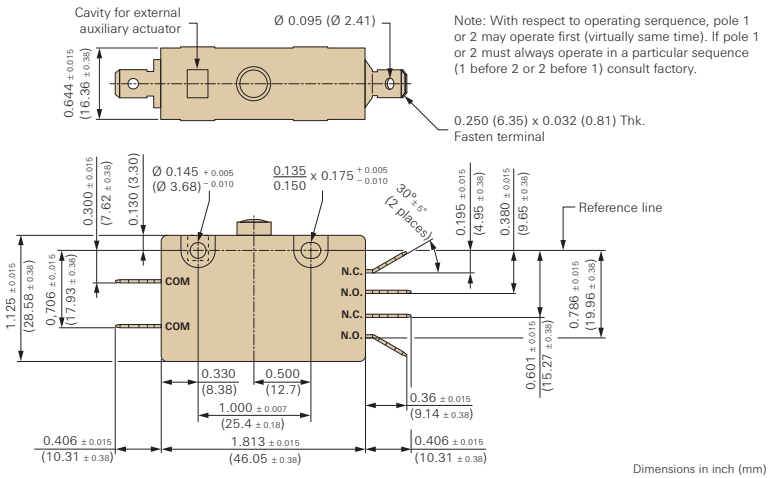

Note: With respect to operating serquence, pole 1 or 2 may operate first (virtually same time). If pole 1 or 2 must always operate in a particular sequence (1 before 2 or 2 before 1) consult factory.

Dimensions in inch (mm)

Generation of order code (example) The order code consists of 5 parameters:				
❶	❷	❸	❹	❺
Series	Electrical rating	Mount point	Circuitry	Actuator
E = General purpose switch	19 = bipolar, 15 A, 125/250 VAC, 3/4HP, 1-1/2HP, 250 VAC	0 = Standard ratio actuator or button	0 = Double throw	A = Button

- Not every configurable variant is available for order. Please contact us.
- The final two digits of article numbers on commercial documents refer to the index of the respective drawing.

For detailed information please note the technical specifications which you can find in the download section of our website **www.switches-sensors.zf.com**.